TB 700–2
NAVSEAINST 8020.8B
TO 11A-1-47
DLAR 8220.1

Joint Technical Bulletin

DEPARTMENT OF DEFENSE AMMUNITION AND EXPLOSIVES HAZARD CLASSIFICATION PROCEDURES

Headquarters
Departments of the Army, the Navy,
the Air Force,
and the Defense Logistics Agency
Washington, DC
5 January 1998

Unclassified

SUMMARY of CHANGE

TB 700–2/NAVSEAINST 8020.8B/TO 11A–1–47/DLAR 8220.1
DEPARTMENT OF DEFENSE AMMUNITION AND EXPLOSIVES HAZARD CLASSIFICATION PROCEDURES

This revision--

- Adds UN Test Series 1 through 7 protocol with flow chart. Selects U.S. tests from protocol. States policy to accept alternate UN tests (para 5-1).

- Provides more specific test requirements and pass/fail criteria organized by test, with diagrams (paras 5-2 thru 5-9).

- Adds flash point test for liquid explosives (para 5-9).

- Revises blast measurements procedures and interpretations (para 6-2).

- Revises fragment hazard assessment procedures (para 6-3).

- Incoporates the UN thermal hazards assessment procedures and criteria (para 6-4).

- Replaces Sample Summary Sheet and NATO Data Card (for ammunition) with sample DD forms (para 6-5c and figs 6-7 and 6-8).

- Identifies alternate hazard classification test (with restrictions) that have application for qualification, insensitive munitions, and system vulnerability (para 6-6).

- Provides new Service and DOE addresses for interim hazard classification responsibilities and actions (para 7-2).

- Adds DOT/UN Test Series 3 requirements. States policy that 70-card gap test (or ARDEC solid gun propellant shock sensitivity test) and cap test are required for interim HD 1.3 classification (para 7-3a).

- Gives procedures for obtaining international shipment of iterim hazard classified items with competent authority approval (para 7-3d).

- Revises responsibilities and procedures for managing the Joint Hazard Classification System (JHCS) (para 8-3).

- References the changes in DOT hazard classification procedures (para 8-4).

- Redefines JHCS data input and format (para 8-5).

Headquarters
Departments of the Army, the Navy,
the Air Force,
and the Defense Logistics Agency
Washington, DC
5 January 1998

*TB 700–2
NAVSEAINST 8020.8B
TO 11A–1–47
DLAR 8220.1

Joint Technical Bulletin

DEPARTMENT OF DEFENSE AMMUNITION AND EXPLOSIVES HAZARD CLASSIFICATION PROCEDURES

By Order of the Secretary of the Army:

DENNIS J. REIMER
General, United States Army
Chief of Staff

Official:

JOEL B. HUDSON
Administrative Assistant to the Secretary of the Army

By Order of the Secretary of the Navy:

GEORGE R. STERNER
Vice Admiral, United States Navy
Commander, Naval Sea Systems Command

By Order of the Secretary of the Air Force:

RONALD R. FOGLEMAN
General, United States Air Force
Chief of Staff

Official:

HENRY VICCELLIO, JR.
General, United States Air Force
Commander, AFMC

By Order of the Director, Defense Logistics Agency:

RAUL A. MARTINEZ
DASC Administrator

History. This is a complete revision of TB 700–2, NAVSEAINST 8020.8A, TO 11A-1-47, and DLAR 8220.1.

Summary. This publication sets forth detailed procedures for hazard classifying ammunition and explosives in accordance with Department of Transportation regulations, North Atlantic Treaty Organization guide lines, and United Nations recommendations.

Applicability. This TB applies to the Defense Logistics Agency, the Navy, the Air Force, the Active Army, the Army National Guard, the U.S. Army Reserve.

Proponent and exception authority. The proponent of this TB is the Chairman, Department Of Defense Explosives Safety Board, Room 856C, Hoffman Building 1, 2461 Eisenhower Avenue, Alexandria, VA 22331–0600, Phone: DSN 221–8624, Commercial: (703) 325–8624; Fax: (703) 325–6227.

Suggested Improvements. Users are invited to send comments, corrections, and suggested improvements directly to the Chairman, Department Of Defense Explosives Safety Board, Room 856C, Hoffman Building 1, 2461 Eisenhower Avenue, Alexandria, VA 22331–0600, Phone: DSN 221–8624, Commercial: (703) 325–8624; FAX: (703) 325–6227.

Distribution. To be distributed in accordance with initial distribution number (IDN) 343699 requirements for TB 700-2.

Contents (Listed by paragraph and page number)

Chapter 1
Introduction, *page 1*
Purpose ❗1–1, *page 1*
NATO Standardization Agreement (STANAG) ❗1–2, *page 1*
Use of the procedures ❗1–3, *page 1*
Application ❗1–4, *page 1*
Hazards not determined by these criteria ❗1–5, *page 1*
Predominant hazard ❗1–6, *page 1*
Samples for laboratory examination ❗1–7, *page 1*
Non-Class 1 and non-regulated articles ❗1–8, *page 1*
Transportation of unexploded ordnance (UXO) ❗1–9, *page 1*
Chapter 2
Glossary, *page 2*
AMMONIUM-NITRATE-fuel oil mixture (ANFO) ❗2–1, page 2
AMMUNITION ❗2–2, page 2
AMMUNITION, ILLUMINATING, with or without burster, expelling charge or propelling charge ❗2–3, page 2
AMMUNITION, INCENDIARY ❗2–4, page 2
AMMUNITION, PRACTICE ❗2–5, page 2
AMMUNITION, PROOF ❗2–6, page 2
AMMUNITION, SMOKE ❗2–7, page 2
AMMUNITION, TEAR-PRODUCING, with burster, expelling charge or propelling charge ❗2–8, page 2
AMMUNITION, TOXIC with burster, expelling charge or propelling charge ❗2–9, page 2
ARTICLE, EXPLOSIVE ❗2–10, page 2
ARTICLES, EXPLOSIVE, EXTREMELY INSENSITIVE (ARTICLES, EEI) ❗2–11, page 2
ARTICLES, PYROPHORIC ❗2–12, page 2
ARTICLES, PYROTECHNIC, for technical purposes ❗2–13, page 2
BLACK POWDER (GUNPOWDER) ❗2–14, page 2
BOMBS ❗2–15, page 2
BOOSTERS ❗2–16, page 2
BURNING REACTION ❗2–17, page 2
BURSTERS, EXPLOSIVE ❗2–18, page 2
CARTRIDGES, BLANK ❗2–19, page 3

*This publication supersedes TB 700–2, NAVSEAINST 8020.B, AF TO 11A–1–47, DLAR 8220.1, 5 December 1989.

CARTRIDGES, FLASH • 2–20, *page 3*
CARTRIDGES FOR WEAPONS • 2–21, *page 3*
CARTRIDGES FOR WEAPONS, INERT PROJECTILE • 2–22, *page 3*
CARTRIDGES, POWER DEVICE • 2–23, *page 3*
CARTRIDGES, SIGNAL • 2–24, *page 3*
CARTRIDGES, SMALL ARMS • 2–25, *page 3*
CASES, CARTRIDGE, EMPTY, WITH PRIMER • 2–26, *page 3*
CASES, COMBUSTIBLE, EMPTY, WITHOUT PRIMER • 2–27, *page 3*
CHARGES, BURSTING • 2–28, *page 3*
CHARGES, DEMOLITION • 2–29, *page 3*
CHARGES, DEPTH • 2–30, *page 3*
CHARGES, EXPELLING • 2–31, *page 3*
CHARGES, EXPLOSIVE, COMMERCIAL, without detonator • 2–32, *page 3*
CHARGES, PROPELLING • 2–33, *page 3*
CHARGES, PROPELLING FOR CANNON • 2–34, *page 3*
CHARGES, SHAPED, COMMERCIAL, without detonator • 2–35, *page 3*
CHARGES, SHAPED, FLEXIBLE, LINEAR • 2–36, *page 3*
CHARGES, SUPPLEMENTARY, EXPLOSIVE • 2–37, *page 3*
COMPATIBILITY • 2–38, *page 3*
COMPONENTS, EXPLOSIVE TRAIN, N.O.S. • 2–39, *page 3*
COMPOSITE PROPELLANT • 2–40, *page 3*
CONTRIVANCES, WATER-ACTIVATED, with burster, expelling charge or propelling charge • 2–41, *page 3*
CORD, DETONATING, flexible • 2–42, *page 3*
CORD (FUSE) DETONATING, metal clad • 2–43, *page 3*
CORD, IGNITER • 2–44, *page 4*
CUTTER, CABLE, EXPLOSIVE • 2–45, *page 4*
DEBRIS • 2–46, *page 4*
DEFLAGRATION REACTION • 2–47, *page 4*
DETONATION REACTION • 2–48, *page 4*
DETONATOR ASSEMBLIES, NON-ELECTRIC, for blasting • 2–49, *page 4*
DETONATORS • 2–50, *page 4*
DoD COMPONENT (DODC) • 2–51, *page 4*
DYNAMITE • 2–52, *page 4*
EFFECTIVE EXPLOSIVE WEIGHT (EEW) • 2–53, *page 4*
ENTIRE LOAD AND TOTAL CONTENTS • 2–54, *page 4*
EX NUMBER • 2–55, *page 4*
EXPLODE • 2–56, *page 4*
EXPLOSION REACTION • 2–57, *page 4*
EXPLOSION OF THE TOTAL CONTENTS • 2–58, *page 4*
EXPLOSIVE, BLASTING • 2–59, *page 4*
EXPLOSIVE, BLASTING, TYPE A • 2–60, *page 4*
EXPLOSIVE, BLASTING, TYPE B • 2–61, *page 4*
EXPLOSIVE, BLASTING, TYPE C • 2–62, *page 4*
EXPLOSIVE, BLASTING, TYPE D • 2–63, *page 4*
EXPLOSIVE, BLASTING, TYPE E • 2–64, *page 5*
EXPLOSIVE, DEFLAGRATING • 2–65, *page 5*
EXPLOSIVE, DETONATING • 2–66, *page 5*
EXPLOSIVE, EXTREMELY INSENSITIVE DETONATING SUBSTANCE (EIDS) • 2–67, *page 5*
EXPLOSIVE, PRIMARY • 2–68, *page 5*
EXPLOSIVE, SECONDARY • 2–69, *page 5*
FIREBRAND • 2–70, *page 5*
FIREWORKS • 2–71, *page 5*
FLARES • 2–72, *page 5*
FLASH POWDER • 2–73, *page 5*
FORBIDDEN EXPLOSIVE • 2–74, *page 5*
FRAGMENT • 2–75, *page 5*
FUSE/FUZE • 2–76, *page 5*
FUSE, IGNITER, tubular, metal clad • 2–77, *page 5*
FUSE INSTANTANEOUS, NON-DETONATING (QUICKMATCH) • 2–78, *page 5*
FUSE, SAFETY • 2–79, *page 5*
FUZES • 2–80, *page 5*
GRENADES, hand or rifle • 2–81, *page 5*
HAND-HELD SAFE • 2–82, *page 5*
HAZARDOUS FRAGMENT • 2–83, *page 5*
HAZARDOUS FRAGMENT DENSITY • 2–84, *page 5*
HIGH EXPLOSIVE WEIGHT • 2–85, *page 5*
IGNITERS • 2–86, *page 5*
IGNITION, means of • 2–87, *page 5*
INITIATION, means of • 2–88, *page 6*
LIGHTERS, FUSE • 2–89, *page 6*
MASS EXPLOSION • 2–90, *page 6*
MINES • 2–91, *page 6*
NET EXPLOSIVE WEIGHT (NEW) • 2–92, *page 6*
NET EXPLOSIVE WEIGHT FOR Q–D (NEWQD) • 2–93, *page 6*
NET PROPELLANT WEIGHT (NPW) • 2–94, *page 6*
NON-REGULATED ARTICLES • 2–95, *page 6*
POWDER CAKE (POWDER PASTE) WETTED • 2–96, *page 6*
POWDER, SMOKELESS • 2–97, *page 6*
PRIMERS, CAP TYPE • 2–98, *page 6*
PRIMERS, TUBULAR • 2–99, *page 6*
PROJECTILES • 2–100, *page 6*
PROPELLANTS • 2–101, *page 6*
PROPULSION • 2–102, *page 6*
QUANTITY DISTANCE (Q–D) • 2–103, *page 6*
RELEASE DEVICES, EXPLOSIVE • 2–104, *page 6*
ROCKET MOTORS • 2–105, *page 6*
ROCKETS • 2–106, *page 6*
SIGNALS • 2–107, *page 6*
SOUNDING DEVICES, EXPLOSIVE • 2–108, *page 6*
STERADIAN • 2–109, *page 6*
SUBSTANCE, EXPLOSIVE • 2–110, *page 7*
SUBSTANCE, PYROTECHNIC • 2–111, *page 7*
SUBSTANCES, EXPLOSIVE, VERY INSENSITIVE (SUBSTANCES, EVI) N.O.S. • 2–112, *page 7*
TORPEDOES • 2–113, *page 7*
TRACERS FOR AMMUNITION • 2–114, *page 7*
UNEXPLODED ORDNANCE (UXO) • 2–115, *page 7*
WARHEADS • 2–116, *page 7*
WITH MEANS OF INITIATION • 2–117, *page 7*
WITHOUT MEANS OF INITIATION • 2–118, *page 7*

Chapter 3
Administrative Procedures, *page 7*
Introduction • 3–1, *page 7*
Procedures • 3–2, *page 7*
Notification of classifications • 3–3, *page 9*

Chapter 4
Hazard Classification, *page 11*
Scope • 4–1, *page 11*
DOT hazard classes • 4–2, *page 11*
Hazard Class 1 assignment procedures • 4–3, *page 11*
Hazard Classes 2 through 9 assignment procedures • 4–4, *page 11*
Non-Class 1 and non-regulated • 4–5, *page 11*
Compatibility group assignment procedure • 4–6, *page 11*
Compatibility groups • 4–7, *page 11*
Assignment of DOT identification number (United Nations number) • 4–8, *page 12*
Explosive weights for Class 1 items • 4–9, *page 12*
Storage without interim hazard classification • 4–10, *page 12*

Chapter 5
Tests, *page 12*
Hazard classification test protocol • 5–1, *page 12*
UN Test Series 1 (optional) • 5–2, *page 13*
UN Test Series 2 (optional) • 5–3, *page 15*
Test Series 3 (mandatory) • 5–4, *page 15*
UN Test Series 4 (mandatory where appropriate) • 5–5, *page 17*

UN Test Series 5 (mandatory for Hazard Division 1.5) • 5–6, *page 18*
UN Test Series 6 (mandatory for Hazard Divisions 1.1, 1.2, 1.3 and 1.4) • 5–7, *page 19*
UN Test Series 7 (mandatory for Hazard Division 1.6) • 5–8, *page 21*
Additional test • 5–9, *page 24*

Chapter 6
Instrumentation, interpretation of results and alternate tests, *page 62*
Introduction • 6–1, *page 62*
Blast measurements • 6–2, *page 62*
Fragment hazard assessment • 6–3, *page 63*
Thermal effects assessment • 6–4, *page 64*
Interpretation of results • 6–5, *page 64*
Alternate tests • 6–6, *page 66*

Chapter 7
Interim hazard classification, *page 81*
General • 7–1, *page 81*
Authority • 7–2, *page 81*
Limitations • 7–3, *page 82*
Documentation • 7–4, *page 82*

Chapter 8
Joint hazard classification system, *page 83*
Introduction • 8–1, *page 83*
Background • 8–2, *page 83*
Responsibilities and procedures • 8–3, *page 83*
Department of Transportation (DOT) changes • 8–4, *page 83*
Completion of control record for JHCS revision • 8–5, *page 84*

Table List

Table 3–1: Methods for establishing final hazard classification, *page 8*
Table 4–1: DOT hazard classes designator, *page 11*
Table 4–2: DOT hazard class 1 divisions, *page 11*
Table 4–3: DOT Hazard class 2 thru 9 division, *page 11*
Table 6–2: Fragment data requirements, *page 64*
Table 6–1: Hemispherical TNT surface burst--peak pressure and positive impulse, *page 68*
Table 8–1: Joint Hazard Classification System control record, *page 83*
Table 8–2: JHCS control record data elements, *page 85*
Table 8–3: Department of Transportation (DOT) label codes, *page 89*
Table 8–4: Hazard symbol codes, *page 89*
Table 8–5: Department of Transportation (DOT) class codes, *page 89*
Table 8–6: Department of Transportation (DOT) shipping description codes, *page 90*

Figure List

Figure 3–1: Method for establishing final hazard classification., *page 10*
Figure 5–1: UN hazard classification procedures for articles and substances, *page 25*
Figure 5–1A: UN hazard classification procedures for articles. and substances (cont.), *page 26*
Figure 5–2: Gap test configuration for solid —UN Test 1(a) (iii), *page 27*
Figure 5–3: Gap test configuration for liquid substances—UN Test 1(a) (iii), *page 28*
Figure 5–4: Number eight (USA) detonator, *page 29*
Figure 5–5: Internal ignition test—UN Tests 1(b) (ii) and 2(b) (ii), *page 30*
Figure 5–6: Slow cookoff bomb test device—UN Tests 1(b) (iii) and 2(b) (iv), *page 31*
Figure 5–7: Gap test configuration for solid substances—UN Test 2(a) (iii), *page 32*
Figure 5–8: Cap test configuration for liquid substances—UN Test 2(a) (iii), *page 33*
Figure 5–9: Bureau of explosives impact machine—UN Test 3(a) (i), *page 34*
Figure 5–10: Bureau of explosives impact machine sample assembly for solid substances—UN Test 3(a) (i), *page 35*
Figure 5–11: Bureau of explosives impact machine sample assembly for liquid substances—UN Test 3(a) (i), *page 36*
Figure 5–12: ABL friction test configuration—UN Test 3(b) (iii), *page 37*
Figure 5–13: Termal stability test configuration—UN Test 3(c), *page 38*
Figure 5–14: Small-scale burning test configuration—UN Test 3 (d) (i), *page 39*
Figure 5–15: Termal stability test for articles—UN Test 4(a), *page 40*
Figure 5–16: Steel tube drop test for liquids—UN Test 4(b) (i), *page 41*
Figure 5–17: Twelve meter drop test configuration —UN Test 4(b) (ii), *page 42*
Figure 5–18: Cap sensitivity test configuration—UN Tests 5(a) and 7(a), *page 43*
Figure 5–19: Alternate cap sensitivity test configuration—UN Tests 5(a) and 7(a), *page 44*
Figure 5–20: Deflagration to detonation test configuration—UN Test 4(b) (ii), *page 45*
Figure 5–21: Typical wood fuel arrangement for external fire test for Hazard Division 1.5—UN Test 5(c), *page 46*
Figure 5–22: Prince incendiary spark test arrangement—UN Test 5(d), *page 47*
Figure 5–23: Single package test arrangement —UN Test 6(a), *page 48*
Figure 5–24: Typical stack test arrangement—UN Test 6(b), *page 49*
Figure 5–25: Typical wood fuel arrangement for external fire (bonfire) test—UN Test 6(c), *page 50*
Figure 5–26: EIDS gap test configuration—UN Test 7(b), *page 51*
Figure 5–27: Susan impact test arrangement—UN Test 7(c) (i), *page 52*
Figure 5–28: Susan projectile—UN Test 7(c) (i), *page 53*
Figure 5–29: Friability test configuration—UN Tests 7(c) (ii) and 7(d) (ii), *page 54*
Figure 5–30: Steel plate and recovery box setup for friability test—UN Tests 7(c) (ii) and 7(d) (ii), *page 55*
Figure 5–31: Closed vessel for friability test–UN Tests 7(c) (ii) and 7(d) (ii), *page 56*
Figure 5–32: Steel pipe used for EIDS bullet impact, EIDS external fire test and EIDS slow cookoff test—UN Tests 7(d) (i), 7(e), and 7(f), *page 57*
Figure 5–33: EIDS bullet impact test arrangement—UN Test 7(d) (i), *page 58*
Figure 5–34: EIDS slow cookoff test—UN Test 7(f) and 1.6 article slow cookoff test —UN Test 7(h), *page 59*
Figure 5–35: 1.6 multiple bullet impact test arrangement—UN Test 7(j), *page 60*
Figure 5–36: Tag closed vessel, *page 61*
Figure 6–1: Idea overpressure vs. time history, *page 69*
Figure 6–2: Hemispherical TNT surface burst—peak pressure and positive impulse, *page 70*
Figure 6–3: Velocity/density arena configuration—method 1, *page 71*
Figure 6–4: Fragmentation characterization arena—method 1, *page 72*

Contents—Continued

Figure 6–5: Fragment collection coordinate system—method 1, *page 73*
Figure 6–6: Fragment recovery areas for tests 6(b) and 6(c)—method 2, *page 74*
Figure 6–7: Sample substance data base recording form, *page 75*
Figure 6–7A: Sample substance data base recording form (cont.), *page 76*
Figure 6–8: Sample ammunition data base recording form, *page 77*
Figure 6–8A: Sample ammunition data base recording form (cont.), *page 78*
Figure 6–9: Solid rocket motor card gap test protocol, *page 79*
Figure 6–10: Super large-scale gap test configuration, *page 80*
Figure A: Title, *page 95*

Chapter 1
Introduction

1–1. Purpose

This publication sets forth procedures for determining the reaction of ammunition and explosives (as defined in DoD 6055.9–Standard (STD) (see App A, Ref 1) to specified initiating influences from tests. Based on reactions obtained, it further provides for assignment of appropriate hazard classifications for transportation and storage as specified in Chapter 4. It seeks to assure that under identical conditions, all DoD Components (DODCs) will use identical hazard classifications for ammunition and explosives items.

1–2. NATO Standardization Agreement (STANAG)

In the interest of safety and uniformity of hazard classification of ammunition and explosives, NATO STANAG No. 4123 (see App A, Ref 2) has been developed. The title of this STANAG is "Methods to Determine and Classify the Hazards of Ammunition and Explosives." The United States has ratified this STANAG and is implementing it in this document. Those portions of this document which are indicated as being required by the STANAG must be followed until changed or deleted by formal notification action by the United States to NATO authorities.

1–3. Use of the procedures

a. Procedures herein will be included in any test plan that is developed by the responsible DODC for a specific new item to be tested. They are to be considered as a minimum with regard to the type and number of tests. Additional tests, both in number and type, may be conducted as desired by the responsible DODC or as required to achieve mutual agreement among DODCs.

b. In order to best utilize limited resources and avoid test redundancy, hazard classification test plans should be tailored, to the maximum extent possible within the guidelines contained in this publication, so that tests for hazard classification, qualification, insensitive munitions, and system vulnerability can be organized into one coordinated test program with the minimum number of required assets and tests.

1–4. Application

This publication applies to ammunition and explosives in the condition and form that they are stored and offered for transportation. Usually, this means the packaged item. It will apply for the determination of hazard classifications that arise either from a modification to existing ammunition or its packaging or from the introduction of new ammunition or packaging. It is not intended that this publication will necessarily apply retroactively. However, the responsible DODC will indicate upon request whether or not the classification of a particular item has been determined according to this publication. Where it has not and there are doubts as to the validity of the classification, the responsible DODC will verify its original classification by means prescribed in this publication. Hazard classifications of record for which documentation of test results is not available, and when there is no reason to doubt the validity of the classification, may be submitted for approval according to paragraph 3–2.

1–5. Hazards not determined by these criteria

During the development of these procedures, all types of hazards were considered; however, tests are not included to specifically determine the following:

a. Hazards—

(1) During various stages of manufacture and assembly.

(2) From flight range of guided missiles or rockets.

(3) Associated with launching of a vehicle or tactical missile.

(4) Or associated with any other operations that are not transportation and storage.

b. Susceptibility to accidental initiation by—

(1) Electrostatic and electromagnetic influence.

(2) Rough handling and vibration.

(3) Effects of exposure to hot and cold environments.

(4) Mechanical defects.

(5) Solar radiation.

(6) Temperature shock.

(7) Abnormal functioning.

(8) Or combat exposure.

1–6. Predominant hazard

In the event the ammunition item to be classified contains a hazardous material such as: fuel, oxidizer or compressed gas which presents a greater hazard in transportation than the Class 1 material, then the protocol for the predominant hazard should be used rather than that for Class 1 materials. For instance, if a rocket contains gallons of flammable liquid and a small igniter, then the proper hazard classification may be Class 3, rather than Class 1. See Note in paragraph 3–1*a*.

1–7. Samples for laboratory examination

Transportation of explosives samples authorized in accordance with paragraph 173.56(d), of 49 CFR (see App A, Ref 3) which have not been subjected to tests required for interim hazard classification (para 7–3) are limited to 2.3 kg (5.0 lb) per shipment. The samples are shipped as Hazard Division 1.1 with an appropriate compatibility group specified.

1–8. Non-Class 1 and non-regulated articles

a. Class 1 comprises explosive articles, except devices considered to be "hand-held safe" (see chap 2) which contain explosive substances in such quantity or of such a character that their inadvertent or accidental ignition or initiation during transport shall not cause any effect external to the device either by projection, fire, smoke, heat or loud noise (taken from para 1.11, Chapter 1, of App A, Ref 4). Hand-held safe articles are identified as non-Class 1.

b. Non-Class 1 articles that do not contain any other classes of dangerous goods (Classes 2 through 9) as defined in 49 CFR Part 173, Subpart D (see App A, Ref 3) are identified as non-regulated. Non-Class 1 articles that do contain other classes of dangerous goods may be identified as non-regulated based on further evaluation (see App A, Ref 3).

1–9. Transportation of unexploded ordnance (UXO)

a. Ammunition and explosives are often discovered on current DoD installations, formerly used defense sites (FUDS) and other areas affected by DoD activities. DoD UXO found in such circumstances may be unknown or in a state of deterioration that identification by markings, nomenclature or other characteristics may be impossible. Even when identification is made, the original hazard classification no longer applies. There is a critical need in many cases to transport UXO over public transportation routes. Where possible, transport UXO by military vehicle using military personnel.

b. The following procedure is required:

(1) UXO must be examined by personnel qualified for Explosive Ordnance Disposal (EOD) before transporting it from the installation or FUDS. The EOD unit will attempt to identify the ordnance and affirm in writing that the material is safe for transport.

(2) All unidentified UXO shall be handled, transported and stored as Hazard Division 1.1 and appropriate compatibility group. UXO will be stored as unserviceable ammunition (DoD 6055.9– STD (see App A, Ref 1)).

(3) The cognizant DODC, with local EOD assistance, will determine the appropriate packaging, blocking and bracing, marking and labeling, and any special handling requirements for transporting UXO over public transportation routes. These procedures will include the amount of material to be shipped per vehicle and the assigned compatibility group. Documentation to this effect will accompany each shipment. DD Form 836 is also to accompany each shipment.

(4) When EOD personnel are not available throughout a clean-up operation, the delegation of authority by the DODC, or the assigned EOD unit, shall be documented.

(5) If the UXO must be transported by contract vehicle, in addition to the procedures above, the EOD personnel must affirm in writing that the UXO is not a forbidden explosive under paragraph 173.54 of 49 CFR (see App, Ref 3) A, based on standardized EOD evaluation procedures.

(6) Transportation of UXO described in paragraph 1–9 will be accompanied by EPA Form 8700–22 (8700–22A when necessary) prepared in accordance with 40 CFR paragraph 262.20 (App A, Ref 5). Also, see 49 CFR, paragraph 172.205 (App A, Ref 3).

(7) These requirements do not pertain to the emergency response mission of EOD units, nor to the handling of nuclear, biological or toxic chemical agents. These must be considered on a case-by-case basis.

Chapter 2
Glossary

2–1. AMMONIUM-NITRATE-fuel oil mixture (ANFO)
A blasting explosive containing no essential ingredients other than prilled ammonium nitrate and fuel oil.

2–2. AMMUNITION
Generic term related mainly to articles of military application consisting of all kinds of bombs, grenades, rockets, mines, projectiles and other similar devices or contrivances.

2–3. AMMUNITION, ILLUMINATING, with or without burster, expelling charge or propelling charge
Ammunition designed to produce a single source of intense light for lighting up an area. The term includes illuminating cartridges, grenades and projectiles; and illuminating and target identification bombs. The term excludes the following articles which are listed separately: CARTRIDGES; SIGNAL; SIGNAL DEVICES; HAND SIGNALS; DISTRESS FLARES; AERIAL AND FLARES; SURFACE.

2–4. AMMUNITION, INCENDIARY
Ammunition containing incendiary substance which may be a solid, liquid or gel including white phosphorus. Except when the composition is an explosive per se, it also contains one or more of the following: a propelling charge with primer and igniter charge; a fuze with burster or expelling charge. The term includes—

a. AMMUNITION, INCENDIARY, liquid or gel, with burster, expelling charge or propelling charge.

b. AMMUNITION, INCENDIARY, with or without burster, expelling charge or propelling charge.

c. AMMUNITION, INCENDIARY, WHITE PHOSPHORUS, with burster, expelling charge or propelling charge.

2–5. AMMUNITION, PRACTICE
Ammunition without a main bursting charge, containing a burster or expelling charge. Normally it also contains a fuze and a propelling charge. The term excludes the following article which is listed separately: GRENADES, PRACTICE.

2–6. AMMUNITION, PROOF
Ammunition containing pyrotechnic substances, used to test the performance or strength of new ammunition, weapon component or assemblies.

2–7. AMMUNITION, SMOKE
Ammunition containing smoke-producing substance such as chlorosulphonic acid mixture (CSAM), titanium tetrachloride (FM), white phosphorus or smoke-producing pyrotechnic composition based on hexachloroethane (HC) or red phosphorus. Except when the substance is an explosive per se, the ammunition also contains one or more of the following: a propelling charge with primer and igniter charge, or a fuze with burster or expelling charge. The term includes—

a. AMMUNITION, SMOKE, with or without burster, expelling charge or propelling charge.

b. AMMUNITION, SMOKE, WHITE PHOSPHORUS, with burster, expelling charge or propelling charge.

2–8. AMMUNITION, TEAR-PRODUCING, with burster, expelling charge or propelling charge
Ammunition containing tear-producing substance. It also contains one or more of the following: a pyrotechnic substance; a propelling charge with primer and igniter charge; a fuze with burster or expelling charge.

2–9. AMMUNITION, TOXIC with burster, expelling charge or propelling charge
Ammunition containing toxic agent. It also contains one or more of the following: a pyrotechnic substance; a propelling charge with primer and igniter charge; a fuze with burster or expelling charge.

2–10. ARTICLE, EXPLOSIVE
An article containing one or more explosive substances.

2–11. ARTICLES, EXPLOSIVE, EXTREMELY INSENSITIVE (ARTICLES, EEI)
Articles that contain only extremely insensitive detonating substances and which demonstrate a negligible probability of accidental initiation or propagation (under normal conditions of transport) and which have passed Test Series 7.

2–12. ARTICLES, PYROPHORIC
Articles which contain a pyrophoric substance (capable of spontaneous ignition when exposed to air) and an explosive substance or component. The term excludes articles containing white phosphorus.

2–13. ARTICLES, PYROTECHNIC, for technical purposes
Articles which contain pyrotechnic substances and are used for technical purposes such as heat generation, gas generation, theatrical effects, etc. The term excludes the following articles which are listed separately: all ammunition; CARTRIDGES, SIGNAL, CUTTERS, CABLE, EXPLOSIVE, FIREWORKS, FLARES, AERIAL, FLARES, SURFACE, RELEASE DEVICES, EXPLOSIVE, RIVETS EXPLOSIVE, SIGNAL DEVICES, HAND, SIGNALS, DISTRESS, SIGNALS, RAILWAY TRACK, EXPLOSIVE SIGNALS, SMOKE.

2–14. BLACK POWDER (GUNPOWDER)
Substance consisting of an intimate mixture of charcoal or other carbon and either potassium nitrate or sodium nitrate, with or without sulphur. It may be meal, granular, compressed or pelletized.

2–15. BOMBS
Explosive articles which are dropped from aircraft. They may contain a flammable liquid with bursting charge, a photo-flash composition or a bursting charge. The term excludes torpedoes (aerial) and includes BOMBS, PHOTO-FLASH; BOMBS with bursting charge; BOMBS WITH FLAMMABLE LIQUID, with bursting charge.

2–16. BOOSTERS
Articles consisting of a charge of detonating explosive without means of initiation. They are used to increase the initiating power of detonators or detonating cord.

2–17. BURNING REACTION
The energetic material ignites and burns, non-propulsively. The case may rupture nonviolently, allowing mild release of combustion gases. Debris stays mainly within the area of the fire. The debris is not expected to cause fatal wounds to personnel or be a hazardous fragment beyond 15 m (49 ft).

2–18. BURSTERS, EXPLOSIVE
Articles consisting of a small charge of explosive used to open projectiles, or other ammunition in order to disperse their contents.

2–19. CARTRIDGES, BLANK
Articles which consist of a cartridge case with a center or rim fire primer and a confined charge of smokeless or black powder, but no projectile. Used for training, saluting or in starter pistols, etc.

2–20. CARTRIDGES, FLASH
Articles consisting of a casing, a primer and flash powder, all assembled in one piece ready for firing.

2–21. CARTRIDGES FOR WEAPONS
a. Fixed (assembled) or semi-fixed (partially assembled) ammunition designed to be fired from weapons. Each cartridge includes all the components necessary to function the weapon once. The name and description should be used for military small arms cartridges that cannot be described as "cartridges, small arms." Separate loading ammunition is included under this name and description when the propelling charge and projectiles are packed together (see also CARTRIDGES, BLANK).
b. Incendiary, smoke, toxic and tear-producing cartridges are described in this glossary under AMMUNITION, INCENDIARY, etc.

2–22. CARTRIDGES FOR WEAPONS, INERT PROJECTILE
Ammunition consisting of a projectile without bursting charge but with a propelling charge. The presence of a tracer can be disregarded for classification purposes provided that the predominant hazard is that of the propelling charge.

2–23. CARTRIDGES, POWER DEVICE
Articles designed to accomplish mechanical actions. They consist of a casing with a charge of deflagrating explosive and a means of ignition. The gaseous products of the deflagration produce inflation, linear or rotary motion or activate diaphragms, valves or switches or project fastening devices or extinguishing agents.

2–24. CARTRIDGES, SIGNAL
Articles designed to fire colored flares or other signals from signal pistols, etc.

2–25. CARTRIDGES, SMALL ARMS
Ammunition consisting of a cartridge case fitted with a center or rim fire primer and containing both a propelling charge and solid projectile(s). They are designed to be fired in weapons of caliber not larger than 19.1 mm (0.750 in). Shotgun cartridges of any caliber are included in this description. The term excludes: CARTRIDGES, SMALL ARMS, BLANK; and some military small arms cartridges termed CARTRIDGES FOR WEAPONS, INERT PROJECTILE.
Note: CARTRIDGES, SMALL ARMS which satisfy the provisions of 49 CFR 173.56(h) (see App A, Ref 3) may be assigned Hazard Classification 1.4S by the DODC Hazard Classifier. See NOTE to paragraph 3–2*b*(4).

2–26. CASES, CARTRIDGE, EMPTY, WITH PRIMER
Articles consisting of a cartridge case made from metal, plastics or other non-flammable material, in which the only explosive component is the primer.

2–27. CASES, COMBUSTIBLE, EMPTY, WITHOUT PRIMER
Articles consisting of cartridge cases made partly or entirely from nitrocellulose.

2–28. CHARGES, BURSTING
Articles consisting of a charge of detonating explosive such as RDX, Comp B, hexolite, octolite or plastic-bonded explosive designed to produce effect by blast or fragmentation.

2–29. CHARGES, DEMOLITION
Articles containing a charge of a detonating explosive in a casing of fiberboard, plastics, metal or other material. The term excludes the following articles which are listed separately: bombs, mines, etc.

2–30. CHARGES, DEPTH
Articles consisting of a charge of detonating explosive contained in a drum or projectile. They are designed to detonate under water.

2–31. CHARGES, EXPELLING
A charge of deflagrating explosive designed to eject the payload from the parent articles without damage.

2–32. CHARGES, EXPLOSIVE, COMMERCIAL, without detonator
Articles consisting of a charge of detonating explosive without means of initiation, used for explosive welding, jointing, forming and other metallurgical processes.

2–33. CHARGES, PROPELLING
Articles consisting of a propellant charge in any physical form, with or without a casing, for use in cannon or as a component of rocket motors.

2–34. CHARGES, PROPELLING FOR CANNON
Articles consisting of a propellant charge in any physical form, with or without casing, for use in a cannon.

2–35. CHARGES, SHAPED, COMMERCIAL, without detonator
Articles consisting of a casing containing a charge of detonating explosive with a cavity lined with rigid material, without means of initiation. They are designed to produce a powerful, penetrating jet effect.

2–36. CHARGES, SHAPED, FLEXIBLE, LINEAR
Articles consisting of a V-shaped core of a detonating explosive clad by a flexible metal sheath.

2–37. CHARGES, SUPPLEMENTARY, EXPLOSIVE
Articles consisting of a small removable booster in the cavity of a projectile between the fuze and the bursting charge.

2–38. COMPATIBILITY
Ammunition or explosives are considered compatible if they may be stored or transported together without significantly increasing either the probability of an accident or, for a given quantity, the magnitude of the effects of such an accident.

2–39. COMPONENTS, EXPLOSIVE TRAIN, N.O.S.
Articles containing an explosive designed to transmit the detonation or deflagration within an explosive train.

2–40. COMPOSITE PROPELLANT
A composite propellant, also known as a "fuel-oxidizer type propellant," consists of a finely ground oxidizer (such as an inorganic perchlorate or nitrate) in a matrix of plastic, resinous, or elastomeric material that serves as a fuel. Often other additives are included to assist in grain fabrication or curing, or as burning rate modifiers.

2–41. CONTRIVANCES, WATER-ACTIVATED, with burster, expelling charge or propelling charge
Articles whose functioning depends upon physico-chemical reaction of their contents with water.

2–42. CORD, DETONATING, flexible
Articles consisting of a core of detonating explosive enclosed in spun fabric, with plastics or other covering unless the spun fabric is sift-proof; that is, the spun fabric does not allow the explosive to sift out of the sheath.

2–43. CORD (FUSE) DETONATING, metal clad
Article consisting of a core of detonating explosive clad by a soft metal tube with or without protective covering. When the core contains a sufficiently small quantity of explosive, the words "MILD EFFECT" are added.

2–44. CORD, IGNITER

An article consisting of textile yarns covered with black powder or another fast-burning pyrotechnic composition and a flexible protective covering; or it consists of a core of black powder surrounded by a flexible woven fabric. It burns progressively along its length with an external flame and is used to transmit ignition from a device to a charge or primer.

2–45. CUTTER, CABLE, EXPLOSIVE

Articles consisting of a knife-edged device which is driven by a small charge of deflagrating explosive into an anvil.

2–46. DEBRIS

Any portion of the natural ground or of a structure (rocks, structural materials, fittings, equipment, barricade materials, etc.) which is propelled from the site of an explosion.

2–47. DEFLAGRATION REACTION

a. A chemical reaction proceeding at subsonic velocity along the surface of and/or through an explosive, producing hot gases at high pressures.

b. Ignition and burning of the confined energetic materials leads to nonviolent pressure release as a result of a low strength case of venting through case closures (leading post, fuze wells, etc.). The case might rupture but does not fragment; closure covers might be expelled, and unburned or burning energetic material might be thrown about and spread the fire. Propulsion might launch an unsecured test item, causing an additional hazard. No blast or significant fragmentation damage to the surroundings; only heat and smoke damage from the burning energetic material.

2–48. DETONATION REACTION

The most violent type of explosive event. A supersonic decomposition reaction (detonation) propagates through the energetic material to produce an intense shock in the surrounding medium (e.g., air or water) and very rapid plastic deformation of metallic cases followed by extensive fragmentation. All energetic material will be consumed. The effects will include large ground craters for items on or close to the ground, holing/plastic flow damage/fragmentation of adjacent metal plates, and blast overpressure damage to nearby structures.

2–49. DETONATOR ASSEMBLIES, NON-ELECTRIC, for blasting

Non-electric detonators assembled with and activated by such means as safety fuze, shock tube, flash tube or detonating cord. They may be of instantaneous design or incorporate delay elements. Detonating relays, incorporating detonating cord are included. Other detonating relays are included in "Detonators, non-electric."

2–50. DETONATORS

Articles consisting of a small metal or plastic tube containing explosives such as lead azide, PETN or combinations of explosives. They are designed to start a detonating train. They may be constructed to detonate instantaneously, or may contain a delay element. The term includes: DETONATORS for AMMUNITION and DETONATORS for BLASTING, both ELECTRIC and NON-ELECTRIC. Detonating relays without flexible detonating cords are included.

2–51. DoD COMPONENT (DODC)

A DoD department or agency.

2–52. DYNAMITE

A detonating explosive containing a liquid explosive ingredient (generally nitroglycerin, similar organic nitrate esters, or both) that is uniformly mixed with an absorbent material, such as wood pulp, and usually contains materials such as nitrocellulose, sodium and ammonium nitrates.

2–53. EFFECTIVE EXPLOSIVE WEIGHT (EEW)

See paragraph 6–2*f*.

2–54. ENTIRE LOAD AND TOTAL CONTENTS

The phrases "entire load" and "total contents" mean such a substantial proportion that the practical hazard should be assessed by assuming simultaneous explosion of the whole of the explosive content of the load or package.

2–55. EX NUMBER

A number, preceded by the prefix EX-, which is assigned by the Associate Administrator for Hazardous Materials Safety to identify an explosive which has been approved. See 49 CFR 173.56 (App A, Ref 3).

2–56. EXPLODE

The verb used to indicate those explosive effects capable of endangering life and property through blast, heat and projection of missiles. It encompasses both deflagration and detonation.

2–57. EXPLOSION REACTION

Ignition and rapid burning of the confined energetic material builds up high local pressures leading to violent pressure rupturing of the confining structure. Metal cases are fragmented (brittle fracture) into large pieces that are often thrown long distances. Unreacted and/or burning energetic material is also thrown about. Fire and smoke hazards will exist. Air shocks are produced that can cause damage to nearby structures. The blast and high velocity fragments can cause minor ground craters and damage (breakup, tearing, gouging) to adjacent metal plates. Blast pressures are lower than for a detonation reaction.

2–58. EXPLOSION OF THE TOTAL CONTENTS

The phrase "explosion of the total contents" is used in testing a single article or package or small stack of articles or packages. See definition of ENTIRE LOAD AND TOTAL CONTENTS.

2–59. EXPLOSIVE, BLASTING

Detonating explosive substances used in mining, construction and similar tasks. Blasting explosives are assigned to one of five types. In addition to the ingredients listed, blasting explosives may also contain inert components such as kieselguhr, and minor ingredients such as coloring agents and stabilizers.

2–60. EXPLOSIVE, BLASTING, TYPE A

Substance consisting of liquid organic nitrates such as nitroglycerin or a mixture of such ingredients with one or more of the following: nitrocellulose; ammonium nitrate or other inorganic nitrates; aromatic nitro-derivates, or combustible materials, such as wood-meal and aluminum powder. Such explosives must be in powdery, gelatinous or elastic form. The term includes dynamite, gelatine, blasting and gelatine dynamites.

2–61. EXPLOSIVE, BLASTING, TYPE B

Substances consisting of—

a. A mixture of ammonium nitrate or other inorganic nitrates with an explosive such as trinitrotuluene, with or without other substances such as wood-meal and aluminum powder, or

b. A mixture of ammonium nitrate or other inorganic nitrates with other combustible substances which are not explosive ingredients. Such explosives must not contain nitroglycerin, similar liquid organic nitrates or chlorates.

2–62. EXPLOSIVE, BLASTING, TYPE C

Substances consisting of a mixture of either potassium or sodium chlorate or potassium, sodium or ammonium perchlorate with organic nitro-derivates or combustible materials such as wood-meal or aluminum powder or a hydrocarbon. Such explosives must not contain nitroglycerin or similar liquid organic nitrates.

2–63. EXPLOSIVE, BLASTING, TYPE D

Substances consisting of a mixture of organic nitrated compounds

and combustible materials such as hydrocarbons and aluminium powder. Such explosives must not contain nitroglycerin, similar liquid organic nitrates, chlorates or ammonium nitrate. The term generally includes plastic explosives.

2–64. EXPLOSIVE, BLASTING, TYPE E

Substances consisting of water as an essential ingredient and high proportions of ammonium nitrate or other oxidizers, some or all of which are in solution. The other constituents may include nitro-derivates such as trinitrotoluene, hydrocarbons or aluminium powder. The term includes: explosives, emulsion; explosives, slurry and explosives, watergel.

2–65. EXPLOSIVE, DEFLAGRATING

A substance, e.g., propellant, which reacts by deflagration rather than detonation when ignited and used in its normal manner.

2–66. EXPLOSIVE, DETONATING

A substance which reacts by detonation rather than deflagration when initiated and used in its normal manner.

2–67. EXPLOSIVE, EXTREMELY INSENSITIVE DETONATING SUBSTANCE (EIDS)

A substance which, although capable of sustaining a detonation, has demonstrated through tests that it is so insensitive that there is very little probability of accidental initiation.

2–68. EXPLOSIVE, PRIMARY

Explosive substance manufactured with a view to producing a practical effect by explosion which is very sensitive to heat, impact or friction and which, even in very small quantities either detonates or burns very rapidly. It is able to transmit detonation (in the case of initiating explosive) or deflagration to secondary explosives close to it. Examples of primary explosives are mercury fulminate, lead azide and lead styphnate.

2–69. EXPLOSIVE, SECONDARY

Explosive substance which is relatively insensitive (when compared to primary explosives) which is usually initiated by primary explosives with or without the aid of boosters or supplementary charges. Such an explosive may react as a deflagrating or as a detonating explosive.

2–70. FIREBRAND

A projected burning or hot fragment (or debris) whose contained heat may be transferred to a receptor.

2–71. FIREWORKS

Pyrotechnic articles designed for entertainment.

2–72. FLARES

Articles containing pyrotechnic substances which are designed for use to illuminate, identify, signal or warn. The term includes: FLARES, AERIAL; FLARES, SURFACE.

2–73. FLASH POWDER

Pyrotechnic substance which, when ignited, produces an intense light.

2–74. FORBIDDEN EXPLOSIVE

Explosives unsuitable for transportation in accordance with 49 CFR (App A, Ref 3) "Transportation" because they are not properly classified by procedures in this manual (reference 173.56, 49 CFR (App A, Ref 3)) or present unacceptable hazards as specified in paragraph 173.21. Many forbidden explosives are listed in the third column of Table 172.101 of 49 CFR (App A, Ref 3).

2–75. FRAGMENT

Any complete ammunition item, subassembly, pieces thereof, or its packaging material which is propelled from the site of an explosion.

2–76. FUSE/FUZE

Although these two words have a common origin (French fusee, fusil) and are sometimes considered to be different spellings, it is useful to maintain the convention that fuse refers to a cord-like igniting device whereas fuze refers to a device used in ammunition which incorporates mechanical, electrical, chemical or hydrostatic components to initiate a train by deflagration or detonations.

2–77. FUSE, IGNITER, tubular, metal clad

Articles consisting of a metal tube with a core of deflagrating explosive.

2–78. FUSE INSTANTANEOUS, NON-DETONATING (QUICKMATCH)

Article consisting of cotton yarns impregnated with fine black powder (quickmatch). It burns with an external flame and is used in ignition trains for fireworks, etc.

2–79. FUSE, SAFETY

Article consisting of a core of fine grained black powder surrounded by a flexible woven fabric with one or more protective outer coverings. When ignited, it burns at a predetermined rate without any external explosive effect.

2–80. FUZES

Articles designed to start a detonation or a deflagration in ammunition. They incorporate mechanical, electrical, chemical or hydrostatic components and generally protective features. The term includes: FUZES, DETONATING; FUZES, DETONATING with protective features; FUZES, IGNITING.

2–81. GRENADES, hand or rifle

Articles which are designed to be thrown by hand or to be projected by a rifle.

a. The term includes:

(1) GRENADES, hand or rifle, with bursting charge.

(2) GRENADES, PRACTICE, hand or rifle.

b. The term excludes: grenades, smoke which are listed under AMMUNITION, SMOKE.

2–82. HAND-HELD SAFE

A non-Class 1 article (see para 1–8) which contains explosive substances in such quantity or of such a character that their inadvertent or accidental ignition or initiation during transport shall not cause any effect external to the device either by projection, fire, smoke, heat or loud noise (taken from paragraph 1.11 of Chapter 1 of the UN Recommendations on the Transport of Dangerous Goods (ST/SG/AC.10/1 Rev. 7 (App A, Ref 4)).

2–83. HAZARDOUS FRAGMENT

A fragment having an impact energy of 58 ft-lb or greater.

2–84. HAZARDOUS FRAGMENT DENSITY

The number of hazardous fragments per 600 ft^2.

2–85. HIGH EXPLOSIVE WEIGHT

See paragraph 4–9*a*.

2–86. IGNITERS

Articles containing one or more explosive substances used to start deflagration in an explosive train. They may be actuated chemically, electrically or mechanically. This term excludes the following articles which are listed separately: CORD, IGNITER; FUSE, IGNITER; FUSE, INSTANTANEOUS, NON-DETONATING; FUZES, IGNITING; LIGHTERS, FUSE; PRIMERS, CAP TYPE; PRIMERS, TUBULAR.

2–87. IGNITION, means of

A general term used in connection with the method employed to ignite a deflagration train of explosive of pyrotechnic substances

(for example: a primer for a propelling charge; an igniter for a rocket motor; an igniting fuze).

2–88. INITIATION, means of

a. A device intended to cause the detonation of an explosive (for example: detonator; detonator for ammunition; detonating fuze).

b. The term "with its own means of initiation" means that the contrivance has its normal initiating device assembled to it and this device is considered to present a significant risk during storage and transport but not one great enough to be unacceptable. The term does not apply, however, to a contrivance packed together with its means of initiation provided the device is packaged so as to eliminate the risk of causing detonation of the contrivance in the event of accidental functioning of the initiating device. The means of initiating can even be assembled to the contrivance provided there are protective features such that the device is very unlikely to cause detonation of the contrivance in conditions which are associated with transport.

c. For the purposes of classification any means of initiation without two effective protective features should be regarded as Compatibility Group B; an article with it own means of initiation, without two effective features, would be Compatibility Group F. On the other hand a means of initiation which itself possesses two effective protective features would be Compatibility Group D; and an article with a means of initiation which possesses two effective protective features would be Compatibility Group D or E. Means of initiation adjudged as having two effective protective features must be approved by the responsible DODC. A common and effective way of achieving the necessary degree of protection is to use a means of initiation which incorporates two or more independent safety features.

2–89. LIGHTERS, FUSE

Articles of various design actuated by friction, percussion or electricity and used to ignite safety fuse.

2–90. MASS EXPLOSION

Explosion which affects almost the entire load virtually instantaneously.

2–91. MINES

Articles consisting normally of metal or composition receptacles and a bursting charge. They are designed to be operated by the passage of ships, vehicles or personnel. The term includes "Bangalore torpedoes."

2–92. NET EXPLOSIVE WEIGHT (NEW)

See paragraph 4-9c.

2–93. NET EXPLOSIVE WEIGHT FOR Q–D (NEWQD)

See paragraphs 4–9d and 6–2f(8).

2–94. NET PROPELLANT WEIGHT (NPW)

See paragraph 4–9b.

2–95. NON-REGULATED ARTICLES

See paragraph 1–8.

2–96. POWDER CAKE (POWDER PASTE) WETTED

Substance consisting of nitrocellulose impregnated with not more than 60% of nitroclycerin or other liquid organic nitrates or a mixture of these.

2–97. POWDER, SMOKELESS

Substance based on nitrocellulose used as propellant. The term includes propellants with a single base (nitrocellulose (NC) alone)), those with a double base (such as NC and nitroglycerin (NG)) and those with a triple base (such as NC/NG/nitroguanidine). Cast, pressed or bag charges of smokeless powder are listed under "CHARGES, PROPELLING" or "CHARGES, PROPELLING FOR CANNON."

2–98. PRIMERS, CAP TYPE

Articles consisting of a metal or plastic cap containing a small amount of primary explosive mixture that is readily ignited by impact. They serve as igniting elements in small arms cartridges, and in percussion primers for propelling charges.

2–99. PRIMERS, TUBULAR

Articles consisting of a primer for ignition and an auxiliary charge of deflagrating explosive such as black powder used to ignite the propelling charge in a cartridge case for cannon, etc.

2–100. PROJECTILES

Articles such as a shell or bullet which are projected from a cannon or other artillery gun, rifle or other small arm. They may be inert, with or without tracer, or may contain a burster or expelling charge or a bursting charge. The term includes: PROJECTILES, inert, with tracer; PROJECTILES, with burster or expelling charge; PROJECTILES, with bursting charge.

2–101. PROPELLANTS

Deflagrating explosive used for propulsion.

2–102. PROPULSION

A reaction whereby adequate force is produced to impart flight to the test item.

2–103. QUANTITY DISTANCE (Q–D)

The quantity of explosive material and distance separation relationships that provide defined types of protection. These relationships are based on levels of risk considered acceptable for the stipulated exposures and are tabulated in the appropriate Q-D tables. See DoD 6055.9–STD (App A, Ref 1).

2–104. RELEASE DEVICES, EXPLOSIVE

Articles consisting of a small charge of explosive with means of initiation. They sever rods or links to release equipment quickly.

2–105. ROCKET MOTORS

Articles consisting of a solid, liquid or hypergolic fuel contained in a cylinder fitted with one or more nozzles. They are designed to propel a rocket or a guided missile. The term includes: ROCKET MOTORS; ROCKET MOTORS WITH HYPERGOLIC LIQUIDS, with or without expelling charge; ROCKET MOTORS, LIQUID FUELLED.

Note. This definition also applies to rocket motor shapes other than cylindrical, and to rocket motor sections that do not contain the nozzle(s).

2–106. ROCKETS

Articles consisting of a rocket motor and a payload which may be an explosive warhead or other device. The term includes: guided missiles and ROCKETS, LINE-THROWING; ROCKETS LIQUID FUELLED, with bursting charge; ROCKETS, with bursting charge; ROCKETS, with expelling charge; ROCKETS, with inert head.

2–107. SIGNALS

Articles containing pyrotechnic substances designed to produce signals by means of sound, flame or smoke or any combination thereof. The term includes: SIGNAL DEVICES, HAND; SIGNALS, DISTRESS, SHIP; SIGNALS, RAILWAY TRACK, EXPLOSIVE; SIGNALS, SMOKE.

2–108. SOUNDING DEVICES, EXPLOSIVE

Articles consisting of a charge of detonating explosive. They are dropped from ships and function when they reach a predetermined depth or the sea-bed.

2–109. STERADIAN

A unit of measure of solid angles that is expressed as the solid angle

subtended at the center of the sphere by a portion of the surface whose area is equal to the square of the radius of the sphere.

2–110. SUBSTANCE, EXPLOSIVE

A solid or liquid substance (or a mixture of substances) which is in itself capable by chemical reaction of producing gas at such a temperature and pressure and at such a speed as to cause damage to the surrounding. Pyrotechnic substances are included even when they do not evolve gas.

2–111. SUBSTANCE, PYROTECHNIC

A substance or a mixture of substances designed to produce an effect by heat, light, sound, gas or smoke or a combination of these as the result of non-detonative self-sustaining exothermic chemical reactions.

2–112. SUBSTANCES, EXPLOSIVE, VERY INSENSITIVE (SUBSTANCES, EVI) N.O.S.

Substances which present a mass explosion hazard but which are so insensitive that there is very little probability of initiation, or of transition from burning to detonation (under normal conditions of transport) and which have passed Test Series 5.

2–113. TORPEDOES

Articles containing an explosive or non-explosive propulsion system and designed to be propelled through water. They may contain an inert head or a warhead. The term includes: TORPEDOES, LIQUID FUELLED, with inert head; TORPEDOES, LIQUID FUELLED, with or without bursting charge; TORPEDOES, with bursting charge.

2–114. TRACERS FOR AMMUNITION

Sealed articles containing pyrotechnic substances designed to reveal the trajectory of a projectile.

2–115. UNEXPLODED ORDNANCE (UXO)

Explosive ordnance which has been primed, fuzed, armed, or otherwise prepared for action, and which has been fired, dropped, launched, projected, or placed in such a manner as to constitute a hazard, to operations, installations, personnel or material, and remains unexploded by malfunction, design, or for any other cause.

2–116. WARHEADS

Articles consisting of detonating explosives. They are designed to be fitted to a rocket, guided missile or torpedo. They may contain a burster or expelling charge or bursting charge. The term includes WARHEADS, ROCKET, with burster or expelling charge; WARHEADS, ROCKET with bursting charge; WARHEADS, TORPEDO, with bursting charge.

2–117. WITH MEANS OF INITIATION

The term "with (its own) means of initiation" means that an ammunition item or explosive article has its normal initiating device, such as a detonator or detonating fuze, assembled to it or packed with it, and this device is considered to present a significant risk during storage and transport, but not one great enough to be unacceptable.

2–118. WITHOUT MEANS OF INITIATION

The term "without (its own) means of initiation" means that an ammunition item or explosive article does not have its normal initiating device assembled to it or packed with it. The term also applies to ammunition or an article packed with its initiating device, provided the device is packed so as to eliminate the risk of causing detonation of the ammunition or article in the event of accidental functioning of the initiating device. In addition, the term applies to an ammunition item or explosive article assembled with its initiating device provided there are protective features such that the initiating device is very unlikely to cause detonation of the ammunition or article under conditions that are associated with storage and transport. For hazard classification purposes, a means of initiation that possesses two independent effective protective features is not considered to present a significant risk of causing the detonation of an ammunition item or explosive article under conditions associated with storage and transport.

Chapter 3
Administrative Procedures

3–1. Introduction

a. A final hazard classification forwarded through DoD channels for assignment of an EX number by the DOT is the ultimate approval for both domestic and international transportation and storage within a DODC. This chapter establishes procedures and responsibilities for processing information in support of Hazard Classification. NOTE: DOT EX-numbers are not required for non-Class 1 items. Therefore, if an ammunition item is established to be non-Class 1 based on predominant hazard (See para 1–6) then the Tri-Service coordinated DoD hazard classification procedure of this chapter are followed except that the hazard classification is not submitted to DOT. The hazard classification for non-Class 1 items must be assigned according to the properties of the predominant hazard in accordance with 49 CFR 173 (see App A, Ref 3).

b. As a minimum, all DoD ammunition and explosives (except for limited quantity laboratory samples specified in paragraph 1–7) destined for storage on a DoD installation or for transportation in the public domain must be assigned either a DoD storage hazard classification (for storage only; see para 4–10) or an interim hazard classification (for storage and transportation, see Chapter 7). The use of interim hazard classifications for overseas shipments is limited to military carriers. Otherwise, interim hazard classifications are to be used only for domestic transportation. When ammunition and explosives (without final DoD hazard classifications) require international shipment by commercial carrier, the criteria for obtaining an interim hazard classification must satisfied, the need for the international shipment must be justified, and a DOT Classification of Explosives with EX number assignment is required. The request for a DOT Classification of Explosives with EX number assignment is processed by the DODC, through the DDESB and Military Traffic Management Command (MTMC), to DOT.

c. The Department of Energy (DOE) is authorized by DOT in 49 CFR paragraph 173.56(b)(3) (see App A, Ref 3) to examine, classify and approve explosives in accordance with these hazard classification procedures. Interim hazard classification procedures for DOE are included in Chapter 7, as applicable. Final hazard classifications are submitted to DOT in accordance with applicable DOE orders and manuals.

3–2. Procedures

a. Prior to release of an ammunition item or assembly for operational service, the sponsoring organization must obtain a final hazard classification according to the procedures in Chapters 3 through 6. The organization sponsoring development of, or first adopting for use, an ammunition item or assembly is responsible for developing data to assign an appropriate hazard classification and for forwarding that data to the appropriate DODC Hazard Classifier listed in paragraph 3–3*a*.

b. There are four methods to support the final hazard classification for an item: Hazard classification by test; Hazard classification by analogy; Pre-1980 items; and Not new items. The correct method depends upon the specific history and characteristics of the item to be hazard classified. The forwarding correspondence should specify the method selected for obtaining hazard classification. The essential information required to support a hazard classification under each method is provided in the following paragraphs. A condensed information chart in Table 3–1 identifies the essential supporting data for each method.

Table 3–1
Methods for establishing final hazard classification

Supporting data	By tests	By analogy	Pre-1980 item	Not new item
1. TB 700–2 tests	X			
2. Technical data package	X	X	X	X
a. Chart of hazardous materials				
b. Drawings				
c. Packaging				
d. Functional narrative				
3. Comparison chart (old to new)		X		
4. Summary of tests of item doing analogy to		X		
5. Material release date			X	
6. Parent item in JHCS or final hazard classification				X
7. Explain NSN difference				X
8. Substance and/or ammunition data base recording forms (DD Forms 2738 and 2739)	X	X	X	

Notes:
"X" identifies essential supporting data needed for each method. See paragraph 3–2*b*.

(1) Hazard Classification by Test. This method is generally used when the unique qualities of the developmental item prevent a valid analogy to a current hazard classified item which has been tested. The minimum essential supporting data required includes:

(a) Report of tests conducted in accordance with chapters 5 and 6 (see example data forms in figs 6–7 and 6–8), or conducted under an alternate test plan approved by the Department of Defense Explosives Safety Board (DDESB) following Tri-Service coordination (para 3–2*g*.) Note that use of an alternate test must be referenced in the report of tests.

(b) A technical data package including:

1. A chart of the hazardous materials.

2. Item drawings.

3. Packaging drawings.

4. Functional narrative of the item.

(c) Substance and/or Ammunition Data Base Recording Form (see example data forms in figs 6–7 and 6–8).

(2) Hazard Classification by Analogy. Since thousands of ammunition items were classified using approved test procedures, many new items may be classified by close analogy to one of them. **Only items classified by actual tests may be used as the parent for analogy.**

(a) The following engineering analyses and rationale are mandatory requirements for hazard classification by analogy:

1. Similarities of the chemical and physical properties of all explosives and other chemical components of items under analysis being compared.

2. Item ignition source and out-of-line safety features (mechanical or electrical).

3. Item design concepts, features, properties, etc.

4. Other pertinent hazardous characteristics associated with the items involved.

5. Items may be classified 1.4S by analogy in obvious cases (such as small arms ammunition of identical caliber and net explosive weight (NEW)) or when the new item contains less explosives than the tested item, and there is no valid reason to suspect it will violate 1.4S criteria.

(b) The minimum essential supporting data required to be submitted with a request to hazard classify a new item by analogy includes:

1. A technical data package per paragraph 3–2*b*(1) (b) above.

2. A comparison chart of the parent item to the new item to include the EX number of the parent item.

3. A summary of the tests conducted and the results obtained for the parent item.

4. Substance and/or Ammunition Data Base Recording Form, (see example data forms in figs 6–7 and 6–8).

(3) Pre-1980 Items. These items were properly hazard classified prior to 1980 but were not included in the initial Joint Hazard Classification System (JHCS) database (see chap 8) and were never assigned an EX number by DOT. These items may be forwarded for filing with DOTsupported by the following minimum essential data:

(a) A technical data package per paragraph 3–2*b*(1) (b) above.

(b) The date the item was released for field use.

(c) The hazard classification of record.

(d) Substance and/or Ammunition Data Base Recording Form (see example data forms in figs 6–7 and 6–8.

(4) Not New Items. An item is not always considered new when it is assigned a new National Stock Number (NSN). A new NSN may be assigned to an item due to a change in electronics, hardware, minor elements of packaging such as latches or ties, or other changes without affecting its explosive characteristics. However, alterations of explosive components may require the item to be hazard classified as a new explosive as defined in 49 CFR 173.56 (see App A, Ref 3). The responsible DODC Hazard Classifier (para 3–3*a*) will determine whether or not a new NSN requires hazard classification as a new item. Tri-Service coordination is not required for submitting a not new item through DDESB to DOT. The minimum supporting data required for a not new item submission follows:

(a) A technical data package per paragraph 3–2*b*(1) (b) above.

(b) A comparison chart of the existing (parent) item and the item with a different NSN.

(c) Assurance that the existing, or parent, item is in the JHCS database including the EX number.

(d) An explanation of why the NSN was changed.

NOTE: Not new items include CARTRIDGES, SMALL ARMS that satisfy the provisions of 49 CFR 173.56(h) (see App A, Ref 3), and these not new items may be assigned Hazard Classification 1.4S by the DODC Hazard Classifier.

c. For approval purposes, the DODC Hazard Classifiers in paragraph 3–3*a*, assigning the hazard classification will forward the supporting documentation to the other organizations listed, and the DDESB (para 3–3*b*). The DDESB documentation will include completed data forms (see example data forms in figs 6–7 and 6–8) except for not new items and a memorandum on DDESB letterhead addressed through Military Traffic Management Command (MTMC) to the DOT (see fig 3–1 for sample format). The memorandum must bear the certification that the item has been examined and approved in conformance with the procedures prescribed in this publication for signature by the Chairman, DDESB.

d. Upon receiving the supporting documentation for a proposed hazard classification, each of the DODC Hazard Classifiers will advise the DDESB in writing within 30 days of concurrence or nonconcurrence. Failure to reply within 30 days indicates concurrence. The DDESB will resolve nonconcurrence within 30 days of notification.

e. Upon completion of the DDESB review and concurrence, the cover memorandum (fig 3–1) and the supporting documentation will be forwarded to MTMC. MTMC will supply the DoD file number and forward the package to DOT within seven days providing a copy of the forwarding memorandum (fig 3–1) to the DODC's listed

in paragraph 3–3*b*. MTMC will assure that the responsible DODC and the DDESB are apprised of the EX number assigned by DOT.

f. The responsible DODC should invite other components to observe significant hazard classification tests.

g. When test requirements of this document cannot be met for a specific item, the responsible DODC Hazard Classifier (para 3–3*a*) will forward a proposed alternate test plan to the DDESB for review and approval, and to the other DODC Hazard Classifiers for coordination using the same procedures used for proposed hazard classifications (para 3–2*d*). Alternate test plans may not be used without DDESB approval to avoid delays and potential retesting efforts.

3–3. Notification of classifications

a. The DODC offices of primary responsibility for hazard classification are listed below.

Director
U.S. Army Technical Center for Explosives Safety
ATTN: SIOAC–EST
Savanna, IL 61074–9639

Commander
Naval Ordnance Center
ATTN: N71
Farragut Hall, Building D–323
23 Strauss Avenue
Indian Head, MD 20640–5555

Air Force Safety Center
ATTN: SEWV
9700 Avenue G
Kirtland AFB, NM 87117–5670

b. The DODC responsible for determining the hazard classifications will furnish notifications of classifications assigned and supporting documentation to the following:

(1) For concurrence:

Director
U.S. Army Technical Center for Explosives Safety
ATTN: SIOAC–EST
Savanna, IL 61074–9639

Commander
Indian Head Division
Naval Surface Warfare Center
ATTN: Code 04
101 Strauss Avenue
Indian Head, MD 20640–5035

Air Force Safety Center
ATTN: SEWV
9700 Avenue G
Kirtland AFB, NM 87117–5670

(2) For concurrence and transmittal through MTMC to DOT:

Chairman
Department of Defense Explosives Safety Board
Hoffman Building I, Room 856C
2461 Eisenhower Avenue
Alexandria, VA 22331–0600

c. Figure 3–1 will be used as the format for DDESB signature. The DDESB letterhead stationary is used for this purpose and filled out by the DODC. Request the format be as exact as practicable.

d. For information, following assignment of the EX number, MTMC will furnish notification of final hazard classification (supporting documentation need not be furnished).

Commandant
U.S. Coast Guard
ATTN: Hazardous Cargo Division
2100 Second Street, S.W.
Washington, DC 20593–0001

Director
Defense Logistics Agency
ATTN: AQCOI
Cameron Station
Alexandria, VA 22304–6190

DEPARTMENT OF DEFENSE EXPLOSIVES SAFETY BOARD
2461 EISENHOWER AVENUE
ALEXANDRIA, VIRGINIA 22331-0600

DDESB-KT

MEMORANDUM THRU COMMANDER, MILITARY TRAFFIC MANAGEMENT COMMAND, ATTN: MTOP-OPS, 5611 COLUMBIA PIKE, FALLS CHURCH, VA 22041-5050

FOR ASSOCIATE ADMINISTRATOR FOR HAZARDOUS MATERIALS SAFETY, MATERIAL TRANSPORTATION BUREAU, RSPA/DOT, 400 7TH STREET, S.W., WASHINGTON, DC 20590

SUBJECT: Final Hazard Classification for Fuze, Grenade, M219A2, Pre-1980/Not New Item for EX Number XXXXXXX/by Analogy to EX Number XXXXXXX/by Test

1. Reference memorandum, USATCES, SIOAC-EST, 1 Oct 92, same subject as above (encl).

2. Based on the information submitted in referenced memorandum, the following hazard classification is submitted in accordance with 49 CFR 173.56(b). Request these items be placed on file with the Department of Transportation (DOT).

DODC	Nomenclature/NSN	Shipping Description	HD/CG	UN
USA/ USN/ USAF	Fuze, Grenade, M219A2 NSN 1330-01-278-8976	Fuzes, Detonating	1.4B	0257

3. This item has been examined and approved in conformance with the procedures of TB 700-2.

4. Request a copy of the DOT letter assigning the EX number for the above item be provided to this office and the following address: Director, U.S. Army Technical Center for Explosives Safety, ATTN: SIOAC-EST, Savanna, IL 61074-9639.

Attachments
as
cc (w/o encl):
USATCES (SIOAC-EST)
HQ AFSA/SEWV
IHDIVNAVSURFWARCEN (041)

FIRST NAME MI LAST NAME
Colonel, USA/USAF or Captain, USN
Chairman

DoD File # _____

See Paragraph 3-2.*e*

Figure 3-1. Method for establishing final hazard classification.

Chapter 4
Hazard Classification

4–1. Scope

a. The purpose of this chapter is to assure that DODCs employ standard procedures for the assignment of the hazard classifications to ammunition and explosives based on the predominant hazard. Resultant assessments provide a means of readily identifying the hazard characteristics of ammunition (containing Class 1 material) and explosives through assignment of hazard categories established for storage and transport as explained in paragraphs 4–2 through 4–7.

b. The Department of Energy (DOE) is authorized by DOT 49 CFR paragraph 173.56(b)(3) (App A, Ref 3) to examine, classify and approve explosives in accordance with these hazard classification procedures as described in applicable DOE orders and manuals.

c. If an ammunition item is established to be non-Class 1 based on predominant hazard (see para 1–6), then the tri-service coordinated DoD and DOE hazard classification must be assigned according to the properties of the predominant hazard in accordance with 49 CFR 173 (App A, Ref 3). See NOTE in paragraph 3–1*a*.

4–2. DOT hazard classes

a. The hazard classes listed in Table 4–1 below are DOT designators (based on United Nations (UN) recommendations, (see App A, Ref 4)) to denote the type of material.

Table 4–1
DOT hazard classes designator

Hazard class	Material
Class 1	Explosives
Class 2	Gases
Class 3	Flammable liquids
Class 4	Flammable solids
Class 5	Oxidizing substances, organic peroxides
Class 6	Poisonous (toxic) and infectious substances
Class 7	Radioactive material
Class 8	Corrosive substances
Class 9	Miscellaneous dangerous substances

Notes:

[1] If a material is not in Class 1, then procedures in 49 CFR 173 (App A, Ref 3) are to be followed for hazard classification.

[2] Within Class 6, only one division is utilized for ammunition, Hazard Division 6.1, which denotes poisonous (toxic) substances.

b. The hazard division is a designator assigned to denote the character and predominance of the associated hazards and the potential for causing personnel casualties or property damage.

4–3. Hazard Class 1 assignment procedures

a. Test procedures and other information prescribed in Chapter 5 of this publication should be used to determine the appropriate hazard division for ammunition and explosives (Hazard Class 1).

b. Within Class 1 (explosives), there are six divisions (given in Table 4–2 below) which indicate the type of hazards expected.

Table 4–2
DOT hazard class 1 divisions

Hazard division	Hazard
1.1	Mass explosion
1.2	Non-mass explosion, fragment producing
1.3	Mass fire, minor blast, or fragment
1.4	Moderate fire, no blast, or fragment
1.5	Explosive substance, very insensitive (with mass explosion hazard)
1.6	Explosive article, extremely insensitive

c. Supplementing the above, a numerical designator in parentheses will be placed to the left of the hazard division for 1.1 through 1.3, such as (12)1.1, (08)1.2, or (06)1.3 when required to properly describe the hazard. This number is used to designate the minimum separation distance (in hundreds of feet) to provide specified levels of protection from hazardous fragments or firebrands produced by ammunition and explosive items. A minimum distance number will be used for all items in Hazard Division 1.2. For items in Hazard Division 1.1 and 1.3, a minimum distance number will be used where minimum separation distances from limited quantities are greater than that specified by the applicable explosives safety quantity-distance table in DoD 6055.9–STD (App A, Ref 1).

4–4. Hazard Classes 2 through 9 assignment procedures

a. While classifying an ammunition item, if the predominant hazard is determined to be other than Class 1 (i.e., Classes 2 thru 9), definition and criteria for these classes can be found in Title 49–Transportation, Code of Federation Regulations (see App A, Ref 3).

b. The available hazard divisions for Classes 2 through 9 items are given in Table 4–3 below.

Table 4–3
DOT Hazard class 2 thru 9 division

Hazards Divisions	Materials
Class 2	
2.1	Flammable gas
2.2	Non-flammable, non-poisonous compressed gas
2.3	Gas poisonous by inhalation
Class 3	Flammable liquids
Class 4	
4.1	Flammable solid
4.2	Spontaneously combustible material
4.3	Dangerous when wet material
Class 5	
5.1	Oxidizer
5.2	Organic peroxide
Class 6	
6.1	Poisonous material
6.2	Infectious substance
Class 7	Radioactive material
Class 8	Corrosive material
Class 9	Miscellaneous hazardous materials

4–5. Non-Class 1 and non-regulated

When function testing (at least three repetitions) of an unpackaged article demonstrates that explosive effects are contained within the item itself (as is frequently the case with certain devices such as thermal batteries, and some aircraft escape system components), that item may be assigned as "non-Class 1" or "non-regulated" (or classified by predominate hazard) for transportation and storage and considered to be hand-held safe taking into account thermal and mechanical effects (see para 1–8 and footnote to para 5–7*c*(4)(f)*1)*.

4–6. Compatibility group assignment procedure

Assignment of the appropriate compatibility group is by definition. It is usually obvious from the description of the ammunition. Where there is doubt about the interpretation of the definitions of the compatibility groups (para 4–7), it may be helpful to consult a list of classifications of existing types of ammunition. Compatibility Group S is an exception in that testing is a prerequisite for assignment to this group; except for those instances classified by analogy described in paragraph 3–2*b*(2) (a)5. Testing is also a prerequisite for assignment to Compatibility Group N.

4–7. Compatibility groups

Ammunition and explosives are assigned to the appropriate one of 13 transportation and storage compatibility groups (A through H, J, K, L, N, and S).

a. Group A—initiating explosives. Packaged initiating explosives that have the necessary sensitivity to heat, friction, or percussion to make them suitable for use as initiating elements in an explosive train. Examples are lead azide, lead styphnate, mercury fulminate, tetracene, and PETN.

b. Group B—detonators and similar initiating devices. Items containing initiating explosives that are designed to initiate or continue the functioning of an explosive train. Examples are detonators, blasting caps, small arms primers, and fuzes without two or more safety features.

c. Group C—packaged propellants, propelling charges, and devices containing propellant with or without their means of ignition. Items that upon initiation will deflagrate or explode. Examples are single-, double-, triple-base, and composite propellants, rocket motors (solid propellant), and ammunition with inert projectiles.

d. Group D—black powder, secondary high explosives (HE), and ammunition containing secondary HE without its own means of initiation and without propelling charge, or ammunition containing a primary explosive and two or more effective features. Ammunition and explosives that can be expected to explode or detonate when any given item or component thereof is initiated. Examples are: bulk TNT, Composition B, black powder, wet RDX, bombs, projectiles, cluster bomb units (CBUs), depth charges, torpedo warheads, and fuzes with two or more safety features.

e. Group E—ammunition containing HE without its own means of initiation and with propelling charge (other than liquid). Ammunition or devices containing HE and containing propelling charges. Examples are artillery ammunition, rockets, or guided missiles.

f. Group F—ammunition containing HE with its own means of initiation and with a propelling charge (other than liquid) or without propelling charge. HE ammunition or devices (fuzed) with or without propelling charges. Examples are grenades, sounding devices, and similar items having an in-line explosive train in the initiator.

g. Group G—pyrotechnic substances, fireworks, illuminating, incendiary, smoke including HC, or tear-producing munitions other than those munitions that are water activated or which contain white phosphorus (WP) or flammable liquid or gel. Ammunition that, upon functioning, results in an incendiary, illumination, lachrymation, smoke, or sound effect. Examples are flares, signals, incendiary or illuminating ammunition, and other smoke- or tear-producing devices and pyrotechnic substances.

h. Group H—ammunition containing both explosives and white phosphorus. Ammunition in this group contains white phosphorus fillers that are spontaneously flammable when exposed to the atmosphere. Examples are ammunition containing WP and PWP.

i. Group J—ammunition containing both explosives and flammable liquids or gels. Ammunition in this group contains flammable liquids or gels other than those that are spontaneously flammable when exposed to water or the atmosphere. Examples are liquid- or gel-filled incendiary ammunition, fuel-air explosive (FAE) devices, flammable liquid-fueled missiles, and torpedoes.

j. Group K—ammunition containing both explosives and toxic chemical agents. Ammunition in this group contains chemicals specifically designated for incapacitating effects more severe than lachrymation. Examples are artillery or mortar ammunition, fuzed or unfuzed, grenades, and rockets or bombs filled with a lethal or incapacitating chemical agent.

k. Group L—ammunition and explosives not included in other compatibility groups. Ammunition or explosives having characteristics that do not permit storage with other types of ammunition or kinds of explosives or dissimilar ammunition of this group. Examples are water-activated substances, phosphides, and pyrophoric substances and devices containing these substances; hypergolics and hypergolic prepackaged liquid-fueled rocket engines; TPA (thickened TEA) and damaged or suspect ammunition of any group.*

l. Group N—ammunition containing only extremely insensitive detonating substance (EIDS). Examples are bombs and warheads. If dissimilar Group N munitions are mixed together and have not been tested to assure non-propagation, then the mixed munitions are considered to be Hazard Division 1.2, compatibility Group D for purposes of transportation and storage.

m. Group S—ammunition presenting no significant hazard. See paragraphs 3–2*b*(4), 5–7*c*(4)(e) and (f), and 6–5*b*(7). Ammunition that is packaged or designed so that any hazardous effects arising from accidental functioning are confined within the package. That is unless the package has been degraded by fire, in which case all blast or projection effects are limited to the extent that they do not significantly hinder firefighting or other emergency response efforts in the immediate vicinity (i.e., 5 meters) of the package. Examples are thermal batteries, explosive switches or valves, and other ammunition items packaged to meet the criteria of Group S items.

*Ammunition/explosives presenting same or similar hazards within this group may be stored together. However, items with dissimilar hazards within this group must be kept separate and apart from all other items.

4–8. Assignment of DOT identification number (United Nations number)

A four-digit Arabic number for transport identification of an item is to be assigned. These numbers are listed in 49 CFR 100 TO 177 paragraph 172, (see App A, Ref 3) which is for sale by the Superintendent of Documents, U.S. Government Printing Office, Mail Stop SSOP, Washington, DC 20402–9328. These numbers are also given in the UN publication entitled "Recommendations on the Transport of Dangerous Goods," (see App A, Ref 4), which is available from the United Nations Sales Section, New York, NY 10017.

4–9. Explosive weights for Class 1 items

a. High Explosive Weight (HEW). The total weight of all Hazard Division 1.1 material contained in an item.

b. Net Propellant Weight (NPW). The total weight of Hazard Division 1.3 material contained in an item.

c. Net Explosive Weight (NEW). NEW = HEW + NPW. The total weight of all Class 1 material in an item, stack of items, ship, vehicle, aircraft, cubicle or building. For instance, the NEW of an entire ship's cargo is required on the manifest for shipment under the International Maritime Dangerous Goods Code (IMDG).

d. Net Explosive Weight for Q-D (NEWQD). NEWQD = NEW unless testing has been conducted (see paras 6–1*a* and 6–2). Based on testing, the NEWQD may include a contribution (less than or equal to 100%) from Hazard Division 1.3 material when the Hazard Division 1.1 material has been functioned. The test protocol and the determination of NEWQD requires approval by the DDESB. The NEWQD may not be acceptable for transportation over the highways or aboard ships. The value of applying NEWQD occurs in storage configurations and when items are deployed.

NOTE: Quantity distance (Q–D) is defined in Chapter 2.

4–10. Storage without interim hazard classification

Occasions may arise, particularly in manufacturing and laboratory environments, that dictate storage of explosive samples or items without interim hazard classifications. In such circumstances, the cognizant DODC Hazard Classifier will establish procedures for assigning hazard classification and compatibility group for storage. This material will not be transported from the installation or development location until the necessary interim hazard classifications are received. See paragraph 1–7 for an exception for transporting small explosive samples.

Chapter 5
Tests

5–1. Hazard classification test protocol

a. Introduction. This chapter prescribes the tests that are required by 49 CFR (App A, Ref 3) for transport purposes and by STANAG 4123, (App A, Ref 2) and DoD 6055.9–STD (App A, Ref 1) for the

establishment of storage hazard classifications. The test requirements described conform to the tests recommended by the United Nations (UN) Committee of Experts on the Transport of Dangerous Goods which are documented in Recommendations on the Transport of Dangerous Goods, Tests and Criteria (see App A, Ref 6). The tests are divided into seven series which are described below:

(1) UN Series 1—Detonability tests for new substances.

(2) UN Series 2—Insensitivity tests for new substances.

(3) UN Series 3—Hazard tests for handling and transporting new substances.

(4) UN Series 4—Hazard tests for handling and transporting new articles, packaged articles and packaged substances.

(5) UN Series 5—Hazard Division 1.5 tests (very insensitive explosive substance (with a mass explosion hazard)).

(6) UN Series 6—Hazard Classification tests (Hazard Divisions 1.1, 1.2, 1.3, and 1.4).

(7) UN Series 7—Hazard Division 1.6 tests (extremely insensitive explosive articles which contain extremely insensitive detonating substances (EIDS)).

b. Test protocol. The general scheme for hazard classifying explosive substances and articles is given in Figure 5–1. United States test options are selected from the UN recommendations for the DoD and DOT test protocol. All hazard classification tests referenced in this document are referred to by the UN designation (numbering system), such as Test 1(a) (iii). Use of optional tests in the UN protocol is acceptable. Note that a "negative (-)" response to a test indicates a "pass"response whereas a "positive (+)" response indicates a "fail"response.

(1) Optional substance tests. UN Series 1 and Series 2 tests listed below are not required for DoD substances manufactured with the view to producing a practical explosive or pyrotechnic effect (see Box 2 in fig 5–1).

(a) Test 1(a) (iii)—Gap Test for Solids and Liquids (para 5–2*a*).

(b) Test 1(b) (ii)—Internal Ignition Test (para 5–2*b*).

(c) Test 1(b) (iii)—Slow Cookoff Bomb (SCB) Test (para 5–2*c*).

(d) Test 2(a) (iii)—Gap Test for Solids and Liquids (para 5–3*a*).

(e) Test 2(b) (ii)—Internal Ignition Test (para 5–3*b*).

(f) Test 2(b) (iv)—Slow Cookoff Bomb (SCB) (para 5–3*c*).

(2) Mandatory substance tests. The acceptance procedure for any substance designed to have an explosive effect begins with the application of UN Test Series 3. Note that Test Series 1 and 2 are not required for substances designed to have an explosive effect. **A substance is forbidden for transport if a positive (+) response is obtained with any of the following tests:**

(a) Test 3(a) (i)—Bureau of Explosives Impact Machine Test (para 5–4*a*).

(b) Test 3(b) (iii)—ABL Friction Test (para 5–4*b*).

(c) Test 3(c)—Thermal Stability Test at 75°C (para 5–4*c*).

(d) Test 3(d) (i)—Small-Scale Burning Test (para 5–4*d*).

(3) Explosive article, packaged or unpackaged, or a packaged explosive substance tests.

(a) Substances that fail Test 3(c) (thermal stability) are forbidden. For this reason, it is recommended that test 3 (c) be the first test conducted. Substances that fail Test 3(a) (i) (impact), Test 3(b) (iii) (friction), and/or Test 3(d) (i) (small-scale burn) may be encapsulated and/or packaged (Box 13, fig 5–1) and subjected to Test 4(b) (ii) (12 meter drop test) for possible acceptance into Class 1.

(b) New articles must be subjected to Test Series 4, when appropriate, for possible acceptance into Class 1. Items are forbidden for transport if the appropriate Series 4 tests (listed below) are not conducted, or if a positive (+) test response is obtained.

Note. It is appropriate (mandatory) to conduct 4(a) on an article or packaged article when a substance used in the article has not passed Test 3(c). It is appropriate (mandatory) to conduct Test 4(b)(i) (for liquids) or 4(b)(ii) (for solids) on articles, packaged articles, or packaged substances when substances in the items have not passed Tests 3(a)(i), 3(b)(iii), and 3(d)(i), or equivalent tests.

1. Test 4(a)—Thermal Stability Test for Articles and Packaged Articles (para 5–5*a*)—does not apply to packaged substances. Thermal stability testing of an article or packaged article is appropriate if the new article contains a substance that has not been subject to Test 3(c), or if the chemical compatibility of explosive substances and the materials with which they are in contact has not been established.

2. Test 4(b)(i)—Steel Tube Drop Test for Liquids (para 5–5*b*).

3. Test 4(b) (ii)—Twelve Meter Drop Test for Articles and Solid Substances (para 5–5*c*).

(4) Hazard Division 1.5 explosives tests. A substance may not be classified as a Hazard Division 1.5 explosive if a positive (+) response is obtained with any of the tests in Series 3 (listed above) or with any of the following tests in Series 5:

(a) Test 5(a)—Cap Sensitivity Test (para 5–6*a*).

(b) Test 5(b) (ii)—DDT Test (para 5–6*b*).

(c) Test 5(c)—External Fire Test for Hazard Division 1.5 (para 5–6*c*).

(d) Test 5(d)—Princess Incendiary Spark Test (para 5–6*d*).

(5) Hazard Divisions 1.1, 1.2, 1.3, and 1.4 tests. Explosive articles, packaged or unpackaged or packaged explosive substances are classified among Hazard Divisions 1.1, 1.2, 1.3 and 1.4 according to their responses in Test Series 6 as described in paragraph 5–7. The tests in Series 6 are:

(a) Test 6(a)—Single Package Test (para 5–7*a*).

(b) Test 6(b)—Stack Test (para 5–7*b*).

(c) Test 6(c)—External Fire (Bonfire) Test (para 5–7*c*).

(d) Approved alternate test procedures for Hazard Division 1.2 and for classifying solid rocket motors are provided in paragraphs 6–6*b*and 6–6*c*, respectively. Also, guidance on airblast data collection, airblast hazard evaluation and interpretation, fragment collection, fragment hazard evaluation and interpretation, and thermal effects data collection, evaluation and interpretation is given in Chapter 6.

(e) For purposes of hazard classification for DoD storage of liquid explosives, an additional test is required; The Flash Point Test (para 5–9). Liquid explosives with a flash point below 95°C (positive (+) response)) are forbidden for storage.

(6) Hazard Division 1.6 tests.

(a) A substance intended for use as an explosive load of a Hazard Division 1.6 article may not have a positive (+) response with any of the substance tests in Test Series 3 (listed above) or Test Series 7 and is classified as an extremely insensitive detonating substance (EIDS). The UN, DOT, and the DoD consider bulk EIDS as a Hazard Division 1.5 substance.

Note. If the EIDS is stored or transported separately as Hazard Division 1.5, then the EIDS must be pass Test Series 5. See comments below for storage of packaged EIDS "articles." The Series 7 substance tests are listed below (note that the Friability Test is an approved alternate test for both the Susan Impact Test and the EIDS Bullet Impact Test):

1. Test 7(a)—EIDS Cap Test (para 5–8*a*).

2. Test 7(b)—EIDS Gap Test (para 5–8*b*).

3. Test 7(c) (i)—Susan Impact Test (para 5–8*c*); or,

4. Test 7(c) (ii)—Friability Test (para 5–8*d*).

5. Test 7(d) (i)—EIDS Bullet Impact Test (para 5–8*e)*) or,

6. Test 7(d) (ii)—Friability Test (para 5–8*d*).

7. Test 7(e)—EIDS External Fire Test (para 5–8*f*).

8. Test 7(f)—EIDS Slow Cookoff Test (para 5–8*g*).

(b) An article intended to be a Hazard Division 1.6 article must contain only EIDS and may not have a positive (+) response with any of the Test Series 7 article tests. **Note that packaged bulk EIDS that satisfies these same criteria may be classified as a Hazard Division 1.6 article for storage.**The Series 7 article tests are listed below.

1. Test 7(g)—1.6 Article External Fire Test (para 5–8*h*).

2. Test 7(h)—1.6 Article Slow Cookoff Test (para 5–8*i*).

3. Test 7(j)—1.6 Article Bullet Impact Test (para 5–8*j*).

4. Test 7(k)—1.6 Article Propagation Test (para 5–8*k*).

(7) Lethal and incapacitating chemical munitions. These items will be tested under criteria unique to chemical weapons.

5–2. UN Test Series 1 (optional)

These tests are conducted to answer the question "Is it an explosive

substance?" The test series includes shock and combustion or thermal tests. Note that the Internal Ignition Test—1(b) (ii) (para 5–2*b*) and the Slow Cookoff Bomb (SCB) Test—1(b) (iii) (para 5–2*c*) are alternate tests.

Note. Test Series 1 results cannot be used to remove a "substance manufactured with the view to producing a practical explosive or pyrotechnic effect"from Class 1 (see fig 5–1).

a. Gap test for solids and liquids—(UN Test 1(a) (iii)).

(1) Introduction. This test is designed to determine whether a liquid or solid substance will maintain a stable detonation and, if it does, measure its shock sensitivity. The sample is loaded in a steel tube of specific dimensions and is subjected to the shock wave generated by the detonation of a pentolite booster.

(2) Apparatus and materials.

(a) Solids. The apparatus for the Gap Test for solids is shown in Figure 5–2. The test sample is contained in a seamless carbon steel cylinder. Spacers are used to separate a mild steel witness plate from the sample tubing at the upper end. The bottom of the cylinder is closed with two layers of polyethylene sheets held in place with gum rubber bands and polyvinylchloride electrical insulating tape. There is no other gap between the pentolite booster and the test sample. A continuous velocity of detonation probe (see App A, Ref 7) made of thin aluminum tube with an axial resistance wire having a resistance of 3.0 ohms/cm (7.6 ohms/in) is mounted on the wall of the sample tubing. The outer tubing of the probe is crimped against the inner wire at the lower end forming a resistor. As a detonation wave moves up the tubing, the outer wall crushes against the inner wire, shortening the effective length and changing the resistance of the wire. If a constant current (usually 0.06 amperes) is made to flow between the outer and inner conductors, the voltage between them is proportional to the effective length and can be recorded as a function of time using an oscilloscope. The slope of the oscilloscope trace is thus proportional to the velocity of the shock wave.

(b) Liquids. The apparatus for the Gap Test for liquids is the same as that for solids except that a better method of sealing the bottom of the tube must be used. The recommended method is to fuse a 0.05 to 0.08 mm (0.002 to 0.003 inch) thick sheet (thicker sheets may adversely affect results) of fluorocarbon or other compatible plastic to the tube. Any suitable technique may be used, however, each tube should be checked for leaks before use. The experimental setup is shown in Figure 5–3. For liquids which may be sensitive to adiabatic compression of bubbles, the tests should be conducted with air bubbles being injected near the bottom of the sample at the time of test. Air is supplied at a pressure of 30 to 100 kPa (4.4 to 14.5 psi) to obtain a flow rate of 1.2 liters/minute (7.1 x 10^{-4}cubic feet/second). The bubbles may be created by a small plastic frit or by holes punched in a loop of vinyl plastic tubing. The tubing supplying the frit or forming the loop should be about 2.0 mm (0.08 in) OD such as for medical catheterization. Holes may be made by perforating the tubing forming the loop with a 1.3 mm (0.051 in) diameter needle and allowing the elastic nature of the tubing to contract the hole. The number of holes and amount of bubbling should be consistent for all tests of a sample or for a sufficient number of tests to establish repeatability. The submerged end to the bubbler shall be plugged with a suitable cement. The air supply tubing may be introduced from the top of the sample tube or through a hole through the side near the bottom and sealed with a suitable cement. Where it is suspected the sample may react with the metal of the test gap tube, the interior of the tube should be coated with suitable material such as fluorocarbon resin spray.

(3) Procedure. The sample is loaded to the top of the steel tube. For liquid samples, adequate ullage should be allowed. Solid samples are loaded to the density attained by tapping the cylinder until further settling becomes imperceptible. The sample is tested at ambient conditions (25 +/- 2°C) and is subjected to the shock wave generated by the detonation of a 165 g (2550 grain) pentolite (50/50 PETN/TNT) pellet. The pentolite pellet is in intimate contact with the bottom of the test sample and initiated with a standard No. 8 detonator shown in Figure 5–4. The detonator is held in place by a cork detonator holder. Three tests should be performed on each sample.

(4) Criteria and method of assessing results.

(a) The criteria for propagation are:

1. A stable propagation velocity greater than the velocity of sound in the substance.

2. A hole is punched through the witness plate.

3. The sample tube is fragmented along its entire length.

(b) The overall test results are considered positive (+) if any two of the three criteria listed above are met.

b. Internal ignition test (UN Test 1(b)(ii)).

(1) Introduction. The Internal Ignition Test is designed to determine the response of substances to rapidly rising temperatures and pressures.

(2) Apparatus and material.

(a) The experimental arrangement is shown in Figure 5–5. The sample of the substance to be tested is contained in a steel pipe which is capped on both ends. An igniter consisting of black powder (100% passed through a No. 20 sieve, 0.84 mm (0.033 in) and 100% retained by a No. 50 sieve, 0.297 mm (0.0117 in)) is located at the center of the sample vessel.

(b) The igniter assembly consists of a cylindrical container made with 0.54 mm (0.021 in) thick cellulose acetate held together by two layers of nylon filament reinforced cellulose acetate tape. The igniter capsule contains a small loop formed from a 25.4 mm (1.0 in) length of nickel-chromium alloy wire 0.3 mm (0.012 in) in diameter and having a resistance of 0.35 ohms. This loop is attached to two insulated tinned copper leading wires. The tinned copper wires are 0.66 mm (0.026 in) in diameter with a 1.3 mm (0.051 in) outside diameter (including insulation). These wires are installed through small holes in the pipe which are sealed with epoxy resin.

(3) Procedure. The sample is loaded into the pipe to a height of 230 mm (9 in). A 20 g (310 grain) igniter is inserted into the center of the pipe, the leads are pulled taut and then sealed with epoxy resin. The remainder of the sample is then loaded and the top cap screwed on. The igniter is fired by applying a 20 V, 15 ampere current. Three tests are performed on each substance.

(4) Criteria and method of assessing results. The criteria for the Internal Ignition Test are:

(a) Positive (+) result if either the pipe or one of the end caps is fragmented into at least two distinct pieces separated from the pipe.

(b) Negative (-) result if the reaction is no more violent than the pipe is either just split (laid open, not fragmented) or the end caps are only distorted.

c. Slow cookoff bomb (SCB) test (UN Test 1(b) (iii)).

(1) Introduction. The Slow Cookoff Bomb (SCB) Test simulates transport and storage situations which could expose substances to slow external heating.

(2) Apparatus and material. The experimental arrangement is shown in Figure 5–6. The sample of substance to be tested is contained in a steel vessel. Two 400-watt electric heaters are fastened to the steel vessel. The vessel has a steel cover with two feedthrough fittings for the thermocouple leads and for a pressure takeoff. The mounting frame consists of two steel witness plates with four bolts that clamp the SCB vessel between them. The vessel is instrumented with one or two plate-type thermocouples; one is spot welded to the center of the vessel wall, and another, if needed, is placed in the center of the substance that is tested. The plate-type thermocouples consist of a 0.3 mm (0.01 in) thick nichrome ribbon approximately 10 mm (0.4 in) square, with the thermocouple wires fanned out and individually spot welded to the nichrome. Plate-type rather than bead-type thermocouples are used in the SCB since plate-type thermocouples give faster response and more representative measurement of the temperature of the interfaces.

(3) Procedure. Test substance in the form of a solid, liquid, slurry or powder is loaded to capacity of the steel vessel of the SCB unit. Sufficient ullage should be allowed so that the vessel will not be liquid full at 400°C. The SCB unit is assembled and placed in a safe testing bay; it is heated by connecting the two 400 watt heaters to 120 VAC or 120 VDC. Strip-chart recorders can be used to record the temperature of the SCB unit and the time to cookoff. The

heating rate is maintained at 3°C/min. The test is started at 25° +/− 3°C and continued until a reaction occurs or a temperature of 400°C is reached.

(4) Criteria and method of assessing results. Time and temperature of a substance reaction (cookoff) are taken from the chart records (for information purposes only), and an assessment of the severity of the reaction is made from the number and condition of the vessel fragments and the condition of the witness plate. Levels of reaction to be identified are:

(a) The result of the test is considered negative (-) if the SCB is in one piece (not ruptured or fragmented) and the witness plates are not deformed or punctured;

(b) The result of the test is considered positive (+) if any of the following occurs:

1. SCB apparatus is ruptured.
2. SCB apparatus is fragmented.
3. Witness plate is deformed.
4. Witness plate is punctured.

5–3. UN Test Series 2 (optional)

These tests are conducted to answer the question "Is the substance too insensitive for acceptance into Class 1?" The test series includes shock and combustion or thermal tests used in Test Series 1 with less stringent pass/fail criteria. Note that the Internal Ignition Test—2(b) (ii) (para 5–3*b*) and the Slow Cookoff Bomb (SCB) Test—2(b) (iv) (para 5–3*c*) are alternate tests.

Note. Test Series 2 results cannot be used to remove a "substance manufactured with the view to producing a practical explosive or pyrotechnic effect" from Class 1 (see fig 5–1).

a. Gap test for solids and liquids (UN Test 2(a) (iii)).

(1) Introduction. The test is designed to measure the shock sensitivity and detonation propagation of a solid or liquid substance to determine whether the substance may be too insensitive for acceptance into Class 1. The sample is loaded in a steel tube of specific dimensions and is subjected to the shock wave generated by the detonation of a pentolite booster with a 5.08 cm (2.0 in - 200 cards) cast PMMA (polymethyl methacrylate) gap (plexiglass or equivalent) between the booster and the test sample.

(2) Apparatus and materials. The apparatus for solid substances is shown in Figure 5–7 and for liquid substances in Figure 5–8. This test is identical to the test of paragraph 5–2*a* except for the addition of a 5.08 cm (2.0 in) diameter by 5.08 cm (2.0 in) thick plexiglass buffer between the 165 g (2550 grain) pentolite donor and substance sample. For more details refer to paragraph 5–2*a*(2).

(3) Procedure. The procedure is the same as that described for paragraph 5–2*a*(3).

(4) Criteria and method of assessing results.

(a) The criteria for propagation are as follows:

1. A stable propagation velocity greater than the velocity of sound in the substance;
2. A hole is punched through the witness plate;
3. The sample tube is fragmented along its entire length.

(b) The overall test results are considered positive (+) if any two of the three criteria are met.

b. Internal ignition test (UN Test 2(b) (ii)).

(1) Introduction. The Internal Ignition Test for Test Series 2 uses the same apparatus as Test 1(b) (ii) with the exception that a 10 g (154 grain) instead of a 20 g (310 grain) fffg black powder igniter is used.

(2) Apparatus and materials. The test configuration (fig 5–5 and para 5–2*b*(2) with an igniter capsule of 3.2 cm (1.25 in) long is used.

(3) Procedure. The procedure of paragraph 5–2*b*(3) is used.

(4) Criteria and method of assessing results. The criteria for the Internal Ignition Test are:

(a) Positive (+) result if either the pipe or one of the end caps is fragmented into at least two distinct pieces separated from the pipe.

(b) Negative (-) result if the pipe is either split (laid open) or the end caps are distorted.

c. Slow cookoff bomb (SCB) (UN Test 2(b) (iv)).

(1) Introduction. The Slow Cookoff Bomb (SCB) Test experimental arrangement is shown in Figure 5–6.

(2) Apparatus and materials. The test is conducted with the apparatus described in paragraph 5–2*c*(2).

(3) Procedure. The test is conducted in accordance with the procedures described in paragraph 5–2*c*(3).

(4) Criteria and method of assessing results. Time and temperature of a substance reaction (cookoff) are taken from the chart records and an assessment of the severity of the reaction is made from the number and condition of the vessel fragments and the condition of the witness plates. Levels of reaction to be identified are:

(a) The result of the test is considered negative (-) if the SCB apparatus is in one piece. The apparatus may be ruptured but the witness plates cannot be deformed or punctured.

(b) The result of the test is considered positive (+) if any of the following occurs:

1. SCB apparatus is fragmented.
2. Witness plate is deformed.
3. Witness plate is punctured.

5–4. Test Series 3 (mandatory)

These tests are conducted to answer the question "Is the substance too hazardous for transport (in the form tested)?" The test series includes substance sensitivity tests for mechanical stimuli (impact and friction) and for heat and flame.

a. Bureau of Explosives impact machine (UN Test 3(a) (i)).

(1) Introduction. This test is designed to measure the sensitivity of the substance to mechanical stimuli involving normal impact to determine if the substance is too hazardous to transport. It is applicable to solid and liquid substances by using two different sample assemblies.

(2) Apparatus and materials. A drawing of the apparatus for the impact test is shown in Figure 5–9. The apparatus is designed so that a weight is free to fall between two parallel cylindrical guide rods from variable heights. The weight strikes a plunger-and-plug assembly which is in contact with the substance sample. The substance sample is placed on a die-and-anvil assembly confined in a cylindrical casing whose inside diameter is just sufficient to permit free movement of the plunger and plug. The plunger, plug, die, casing and anvil are hardened tool steel of hardness 50-55 on the Rockwell C scale and the mating surfaces and the surfaces in contact with the sample have a finish of 0.8 microns (32 micro-inches). The sample holder diameter is 5.1 mm (0.20 inches).

(a) Solid substances. The sample assembly for a solid substance is shown in Figure 5–10.

(b) Liquid substances. The sample assembly for liquid substances is shown in Figure 5–11.

(3) Procedure.

(a) Solids. Ten milligrams of the solid substance is loaded onto the die. The anvil and die are placed in the sample housing and the casing screwed down over them. The plug and plunger are then inserted on top of the sample. The drop weight is raised to the desired height and released. Ten measurements are performed at the specified drop height for each test sample. Either RDX or HMX is used as the reference explosive for evaluating the test results for each test series. Report the RDX or HMX calibration results along with the sample test results.

(b) Liquids. The rebound sleeve, the intermediate pin, and the striker are assembled in the striker housing. A copper cup is placed in a cup positioning block (not shown in fig 5–11) and one drop of the liquid substance is placed in the cup. The housing and its components are placed over the top of the cup positioning block. The end of the striker slips partway into the cup, but is prevented by the cup positioning block from actually touching the liquid in the cup. When the striker housing is lifted from the positioning block, the cup is held on the end of the striker by friction. The striker housing is then screwed down into the anvil housing and the dimensions of the tools are such that the bottom of the copper cup just touches the anvil when the striker housing is screwed in hand-tight. The whole unit is then placed in the same drop weight mechanism

which is used with the Bureau of Explosives' solid impact tester. For liquids, only one drop height is used. This is 25.40 cm (10 inches). The test is also conducted with the liquid absorbed in a piece of filter paper placed in the copper cup. Ten measurements are performed for each sample.

(4) Criteria and method of assessing results.

(a) Solids. The criteria used in the interpretation of this test for solids is that a measurement is considered positive if either an audible report or flame is observed. A sample is considered impact sensitive at a specific drop height if a flame or report is observed in at least 50% of the test trials. A sample which shows impact sensitiveness at a drop height of 10.16 cm (4.0 inches) or less (a positive (+) response) is considered too sensitive for transport.

(b) Liquids. The criterion used in the interpretation of this test for liquids is that a measurement is considered positive if either an audible report or smoke is observed in one of 10 test trials. Any liquid explosive which fails this test at a drop height of 25.4 cm (10.0 inches) or less (a positive (+) response) is considered too sensitive for transport.

b. ABL friction test (UN Test 3(b) (iii)).

(1) Introduction. This test determines the sensitivity of substances to friction. The test substance is subjected to vertical compression force under a non-rotating wheel, while the substance is moved in a horizontal direction on a sliding anvil. It is intended for both liquid and solid substances.

(2) Apparatus and materials. Figure 5–12 illustrates the apparatus. The wheel and anvil are constructed of steel with a finish of 1.52 micron (60 micro-inches). Force is applied hydraulically through the non-rotating wheel to the sample which rests on the anvil. A pendulum impacting on the edge of the anvil propels the anvil at a known velocity, perpendicular to the compressive force that is applied to the sample. Normally, the anvil slides 2.54 cm (1.0 in). The compressive force is measured by a gauge. The initial velocity is determined by calibration.

(3) Procedure. A sample of test substance at 25°C, and in a thin uniform layer (equivalent to one particle thickness for solids based on largest particle size in distribution) is placed on the anvil, under the wheel, 0.64 cm (0.25 in) wide, and extending 2.54 cm (1.0 in) along the sliding contact surface. The wheel is lowered onto the substance and force is applied to the wheel. An initial force of 4450 N (1,000 lb) is typical. In practice the force is changed in increments where the lower value is 75% of the higher value. Maximum values of 8000 N (1,800 lb) and minimum of 44 N (10 lb) are used. A velocity of 0.9 m/sec (3 ft/sec) is a typical choice, although increasing or decreasing velocity in increments of 0.3 m/sec (1 ft/sec) or more may be found useful in additional comparisons. The velocity is changed simply by altering the pendulum angle from vertical from which the pendulum is released. (Thirty degree approximates to 0.9 m/sec (3 ft/sec) slide velocity.)) A new sample is used on each trial, with cleaning of the anvil done between trials. An iterative procedure is used to determine the highest compressive force at which no positive (+) results are obtained in 20 trials. This value is considered the Threshold of Initiation (TIL). Dry pentacrythrite lentranitrate (PETN) is used as a reference explosive for evaluating the test results. Report the PETN results along with the sample results.

(4) Criteria and method of assessing results.

(a) A trial is considered positive (+) if any one of the following results is obtained:

1. Visible sparks.

2. Visible flame.

3. Audible explosion.

4. Loud crackling noise.

5. Detection of reaction products by a gas analyzer.

(b) Discoloration of the sample holder, crepitation (i.e., subdued cracking due to crumbling of the sample), or slight odor in the absence of indicators given by paragraph 5–4*b*(4) (a) above, are not considered positive (+) results.

(c) A substance with friction sensitivity equal to or greater than dry PETN, i.e., lower compressive force, is considered a positive (+) result and is too sensitive for transport. PETN has a TIL of 184 N (41.4 lb) at 0.9 m/sec (3 ft/sec).

c. Thermal stability test at 75°C (UN Test 3 (c)).

(1) Introduction. This test is designed to measure the stability of the substance when subjected to elevated thermal conditions to determine if the substance is too hazardous to transport in the state in which it was tested.

(2) Apparatus and materials.

(a) Apparatus. An oven is required for this test. If an electric oven is used, the heating elements shall be isolated from the test volume. The oven should be equipped with dual controls or a high temperature cutoff feature to preclude thermal runaway if the primary control fails. The control system should maintain the oven temperature at 75 +/- 2°C. The oven should be vented to allow vapors to escape. If it becomes necessary to run the second part of the test, additional apparatus as shown in Figure 5–13 is required. The additional apparatus is two flat bottomed glass tubes equipped with pressure resisting stoppers, three thermocouples and a recorder.

(b) Materials. For the second part of the test, an inert material with physical and thermal properties similar to those of the test substance will be used for the reference material.

(3) Procedure. The test is divided into two parts. The first part is used to determine if a sample shows obvious thermal instability by visual evidence of ignition, explosion, significant color change indicating some reaction or weight loss. The second part is used only in those cases where the first part does not provide a definite conclusion regarding the stability. In the second part, the thermocouple and recorder apparatus described is used to measure any self-heating of the sample.

(a) Thermal stability. A substance sample of up to 50 g (770 grains) is transferred to the tared beaker, covered and weighed. The beaker with cover is placed in the oven and heated at 75°C for 48 hours. Unless an ignition or explosion occurs in the sample and terminates the test, the beaker is removed after the heating period, cooled and weighed. The volatility (weight loss as a percentage of the sample weight) is calculated. Any loss greater than expected from loss of moisture shall be regarded as possible evidence of instability requiring testing for severity of instability (para 5–4*c*(3)(b)). In dealing with an unknown substance, several screening tests with a sample size much less than 50 g (770 grains) are performed to understand the behavior of the substance.

(b) Severity of instability. A 100 g (or 100cm^3) (1,540 grain (6.1 in^3)) sample is placed in one tube and the same quantity of reference substance is placed in the other. Thermocouples $T_1$and $T_2$are inserted into the tubes at half-height of the materials. If the thermocouples are not inert with respect to both the substance being tested and the reference substance, they must be enclosed in sheaths which are inert. Thermocouple $T_3$and the covered tubes are placed in the oven as shown in Figure 5–13. The temperature difference (if any) between test sample and reference is measured for 48 hours after the sample and reference substance reach 75°C. Unless an ignition or explosion occurs, the sample tube is removed, cooled in the desiccator and weighed. Evidence of decomposition of the sample is noted.

(4) Criteria and method of assessing results.

(a) Thermal instability. A test result is considered failing (positive (+)) if ignition or explosion occurs and passing (negative (-)) if no decomposition has occurred. Any decomposition other than minor surface discoloration from oxidation requires the second part of the test to be conducted.

(b) Severity of instability. The sample is considered thermally unstable (positive (+) response - failing) if a temperature difference (i.e., self-heating) of +3°C of the sample (for a minimum time of ten seconds) is recorded. If no ignition or explosion of self heating of 3°C or greater is recorded in the test, but self-heating of less than 3°C is noted, additional tests and/or evaluation may be required to determine thermal stability.

d. Small-scale burning test (UN Test 3(d) (i)).

(1) Introduction. A Small-Scale Burning Test is used to determine if small quantities of substances transition from deflagration to detonation when unconfined.

(2) Apparatus and materials. Figure 5–14 shows the kerosene-soaked sawdust bed and plastic beaker to hold the substance. Ignition of the sawdust bed is accomplished with an appropriate electric igniter.

(3) Procedure. One hundred and twenty-five grams (1930 grains) of the substance under test (liquid or solid) is placed in a 200 cm^3(12.2 in^3) plastic beaker which is compatible with the test substance. The contained sample is placed on the bed of kerosene-soaked sawdust and the sawdust is ignited with the appropriate electric igniter. Three samples should be tested.

(4) Criteria and method of assessing results. A test result is considered positive (+) if explosion or detonation occurs. The substance is judged to be too hazardous for transport (in the form in which it is tested) if any results are positive (+).

5–5. UN Test Series 4 (mandatory where appropriate)

These tests are conducted to answer the question "Is this article, packaged article or packaged substance too hazardous for transport?" The test series includes thermal stability and drop tests for products. The tests are carried out on the packaged substance, packaged article(s), and, if intended to be transported unpackaged, on the article itself. See note for paragraph 5–1*b*(3)(b) for guidance on when Test Series 4 is mandatory.

a. Thermal stability test for articles and packaged articles (UN Test 4(a)).

(1) Introduction. This test is designed to evaluate the thermal stability of articles and packaged articles when subjected to elevated thermal conditions to determine whether the unit being tested is too hazardous for transport. Several criteria are used to evaluate the results of the test. This test does not apply to packaged substances. The minimum size acceptable for this test is the smallest packaged unit.

(2) Apparatus and materials. This test requires an oven equipped with ventilation, explosion-proof electrical features and thermostatic control to maintain the temperature at 75 +/- 0.5°C. Figure 5–15 presents a suggested test configuration. It is desirable that the oven should have dual thermostats or similar protection against excessively high temperatures in the event of a thermostat malfunction. The oven must also be fitted with a temperature recorder to assess any exothermic temperature increase.

(3) Procedure. Depending on the unit being tested, a thermocouple is placed either on the outside casing of the unpackaged article or on the outside casing of an article which is located near the center of its package. The thermocouple is attached to a temperature recorder. The unit to be tested (together with the thermocouple) is placed in the oven, heated to 75°C and maintained at that temperature for 48 hours. The unit is then removed from the oven, cooled and inspected. In dealing with an unknown article, proper precautions should be taken in carrying out the test. Temperatures are recorded and the visual examinations noted.

(4) Criteria and method of assessing results.

(a) A test result is considered positive (+) if any of the following occurs:

1. It explodes.

2. It ignites.

3. It generates colored fumes or odor.

4. It experiences a temperature rise exceeding 3°C.

5. The outside casing of the article or the outside packaging is damaged.

(b) An article or packaged article(s) which gives a positive (+) test result is judged to be too hazardous for transport.

b. Steel tube drop test for liquids (UN Test 4(b) (i)).

(1) Introduction. This test determines the sensitivity to drop of a liquid substance. The test liquid substance is subjected to an impact upon a steel plate while encapsulated in a steel tube. The objective is to determine the maximum drop height at which there is no detonation.

(2) Apparatus and materials. The steel tube, shown in Figure 5–16, is filled with the liquid substance to be tested. The upper end of the tube is closed with a cast iron threaded pipe cap sealed with Teflon (PTFE) tape. A maximum of twenty units will be tested.

(3) Procedure. The liquid substance should be agitated for 10 seconds prior to the drop test. No more than one hour should elapse between the agitation and the test. The liquid substance is dropped in a vertical orientation onto the steel plate. The drop height should be varied by steps of 0.25 m (9.8 in) up to a maximum height of 5 m (197 in). The drop height is increased until the liquid substance detonates or the maximum height is reached. The following information is recorded:

(a) Name of liquid sample.

(b) Density of liquid sample.

(c) Temperature of liquid sample.

(d) Maximum drop height (m) tested at which there was no detonation.

(4) Criteria and method of assessing results.

(a) The phenomena observed should be categorized as follows:

1. Detontation with fragmentation;

2. A reaction causing the tube to burst;

3. No reaction with little damage to the tube;

4. Bursting of the tube.

(b) A test result is considered positive (+) and the liquid substance is considered unsuitable for transport in any form of packaging if a detonation occurs below 5 m (197 in) drop height.

(c) A test result is considered negative (-) and the liquid substance is suitable for transport in metal (or other material) containers if there is no reaction at the maximum drop height of 5 m (197 in).

(d) Transport of the liquid substance in metal packaging should be prohibited if there is a local reaction at 5 m (197 in) without detonation, unless suitability for transport can be demonstrated to the satisfaction of the DoD Hazard Classifiers and the DOT.

c. Twelve meter drop test for articles and solid substances (UN Test 4(b) (ii)).

(1) Introduction. This test determines whether a test unit (packaged substance or article) can withstand a free-fall impact without producing any fire or explosion hazard. It is not intended as a test to evaluate whether the package will withstand the impact.

(2) Apparatus and materials.

(a) Impact surface. The impact surface is a solid base, with a hard reasonably smooth surface. An example of such a surface is shown in Figure 5–17. The length and width of the surface should not be less than one and one-half times the dimension of the unit being tested.

(b) Other apparatus. Photographs or other visual recording devices should be used to verify impact attitude and results. Where impact attitude may be considered to be a significant factor, the test agency may use guidance devices to obtain the desired impact attitude. Such a device should not significantly restrain drop velocity, nor impede rebound after impact. In certain cases, some of the explosive articles in a package of articles under test may be replaced with inert articles. These inert articles should be of the same mass and volume as the explosive articles they replace.

(3) Procedure. The test unit is dropped from a height of 12 meters (40 ft) as measured from the lowest point of the test unit to the impact surface. A safe waiting period following impact prescribed by the test agency should be observed, even if no visible initiation or ignition occurs at impact. The test unit should then be further examined to determine if any ignition or initiation occurred. Data should include package description and observations indicated below. Recorded results should include photographs and recorded visual and audible evidence of initiation of ignition, time of occurrence (if any), and indication of severity of the results in terms such as mass detonation or deflagration. Attitude of test unit at impact should be recorded. Rupture of the package may be noted but does not affect the conclusion. Three drop tests are made on the packaged substance or article. However, each test unit is dropped only once.

(4) Criteria and method of assessing results. A test is considered positive (+) if a fire or explosion resulted from impact. Rupture of the package is not considered a positive result.

5–6. UN Test Series 5 (mandatory for Hazard Division 1.5)

These tests are conducted to answer the question "Is it a very insensitive explosive substance (with a mass explosion hazard); that is, does the behavior of the substance correspond closely to the criteria for Hazard Division 1.5?" The test series includes shock, thermal, fire and flame tests for substances. To be classified as Hazard Division 1.5 a substance must pass all Test Series 5 tests (5(a) Cap Sensitivity Test, 5(b) (ii) DDT Test, 5(c) External Fire Test for Hazard Division 1.5 and 5(d) Princess Incendiary Spark Test).

a. Cap sensitivity test (UN Test 5(a)).

(1) Introduction. The test is designed to determine the sensitivity of a substance to the shock from a standard detonator or blasting cap. The test yields quantitative and unambiguous results and can be used as one of the criteria in Test Series 5 to classify a very insensitive explosive substance in Hazard Division 1.5.

(2) Apparatus and materials. The experimental set up for the Cap Sensitivity Test consists of a cardboard tube filled with the substance. The substance is initiated with a standard detonator (fig 5–4) inserted coaxially in the top of the explosive in the tube to a depth equal to its length. Below the tube is the witness, which consists of either a steel witness plate (illustrated in fig 5–18) or, alternatively, a lead cylinder (illustrated in fig 5–19). The above apparatus is placed onto a square shaped steel plate.

(3) Procedure. The substance under test is filled into the tube in three equal increments. For free-flowing granular substances the tube is dropped from a height of 50 mm (2 in) after filling each increment. Gel-type substances are carefully hand-packed to eliminate voids. In all cases the final density of the explosive in the tube must be equal to or less than its shipping density. For special high-density cartridged explosives, the original cartridge is used instead of the hand-filled tube. Where such original cartridges are inconveniently large for testing, a portion of the cartridge not less than 160 mm (6.3 in) long may be cut off and used for testing. In such cases the detonator is inserted into the end in which the substance has not been disturbed by the action of cutting the cartridge. Those explosives whose cap sensitivity could be temperature dependent must be stored for at least 30 hours at a temperature of 28 - 30°C prior to testing. Explosives containing prilled ammonium nitrate, which have to be shipped in regions of high ambient temperatures must be temperature cycled as follows: 25°C — 40°C — 25°C— 40°C— 25°C prior to testing. The tube is placed onto the witness and steel base plate and the standard detonator inserted coaxially into the top of the explosive. The detonator is then fired from a safe position and the witness examined. The test is conducted three times on each sample or until detonation occurs, whichever occurs first.

(4) Criteria and method of assessing results. The substance is deemed to be "cap sensitive"(a positive (+) response) if in at least one trial—

(a) The lead cylinder is compressed from its initial length by an amount of 3.18 mm (1/8 in) or greater, or

(b) The witness plate shows a total penetration (dents, cracks or lappings in the witness plate do not show "cap sensitivity").

b. DDT test (UN Test 5(b) (ii)).

(1) Introduction. The Deflagration-to-Detonation Transition (DDT) Test is conducted to determine if the substance will easily transition from deflagration to detonation when confined. The test is similar to the Internal Ignition Tests (Test 1(b) (ii) and Test 2(b) (ii)) except that a 5 g (77 grain) igniter is used and a witness plate is used to record the occurrence of detonation.

(2) Apparatus and materials. The experimental arrangement is shown in Figure 5–20. The sample substance to be tested is contained in a steel pipe capped at one end with a forged steel pipe cap, and at the other with a "3000 lb" (13,000 N) mild steel witness plate which is welded to the pipe. An igniter consisting of black powder (100% passed through No. 20 sieve, 0.84 mm (0.033 in), and 100% retained by No. 50 sieve, 0.297 mm (0.0177 in)) is located at the center of the sample vessel. The igniter assembly consists of a cylindrical container which is made from 0.54 mm (0.021 in) thick cellulose acetate and is held together by two layers of nylon filament reinforced cellulose acetate tape. The igniter capsule contains a small loop formed from a 25.4 mm (1.0 in) length of nickel-chromium alloy resistance wire, 0.30 mm (0.012 in) in diameter having a resistance of 0.343 ohms. This loop is attached to two insulated tinned copper leading wires 0.66 mm (0.026 in) in diameter.The overall wire diameter including insulation is 1.27 mm (0.5 in). These lead wires are fed through small holes in the wall of the pipe and are sealed with epoxy resin.

(3) Procedure. After the sample, at 25°C, is loaded into the pipe to a height of 230 mm (9 in), the igniter (with its leads inserted through small holes in the pipe wall) is inserted into the center of the pipe and the leads pulled taut and sealed with epoxy resin. The remainder of the sample is then loaded, and the top cap screwed on. For gelatinous samples, the substance is packed as nearly as possible to its normal shipping density. For granular samples, the substance is loaded to the density obtained by repeated tapping of the pipe against a hard surface. The igniter is fired by a current of 15 amperes obtained from a 20-volt transformer. Three tests shall be performed on each sample. Three samples shall be tested.

(4) Criteria and method of assessing results. The criteria used in the interpretation of this test is that for a positive (+) result a hole should be blown through the witness plate.

c. External fire test for Hazard Division 1.5 (UN Test 5(c)).

(1) Introduction. This test is conducted to determine whether a substance can be classified as a Division 1.5 substance by subjecting it to an external fire test in its packaging.

(2) Apparatus and materials. Firewood or liquid fuel and a suitable support (such as a metal grid) to hold the package are required.

(3) Procedure.

(a) The test shall apply to a package (or packages) of explosive substance in the condition and form in which it is offered for transport. The total volume of the package (or packages) to be tested shall not be less than 0.15 m^3(5.3 ft^3), but the mass need not exceed 200 kg (440 lb) of explosive substance. The package (or packages) must be placed on an incombustible support (such as a metal grid) and exposed to an external fire large enough to engulf the bottom of the package. The flames must reach at least halfway up all sides of the package (or packages). If necessary, the packages may be encircled with a steel strip to support them during the test. The rate of heating must be credible in relation to what might occur in an accident during transportation, but it is not necessary to reproduce precisely all the conditions of a realistic fire. Suitable methods include a bonfire using brushwood, a crib fire using a lattice of wooden laths, a liquid fuel fire, a propane burner and a brazier. An acceptable method to produce a wood fire which has a balanced air/fuel ratio, thereby avoiding too much smoke which would obscure the events, and which burns with sufficient intensity and duration to bring many kinds of packaged explosives to reaction in 10 to 30 minutes is illustrated in Figure 5–21 and described below:

1. Pile air dried wood in the form of a lattice beneath the support grid.

2. Surround the package (or packages) with wood. Figure 5–21 shows a lattace arrangement. Other configurations are acceptable.

3. Saturate the wood with a suitable liquid fuel.

4. Ignite the pile simultaneously on two sides.

(b) A receptacle filled with liquid fuel or a combination of wood and liquid fuel may be used as alternatives to the stack of wood beneath and around the support grid. The surface area of the fuel receptable should be greater than that of the stack of wood on the support grid. The distance between the grid platform and the receptacle should be approximately 0.5 m (1.5 ft). Before using this method, consideration should be given to whether any quenching action or adverse interaction between explosives and fuel can occur such as might bring the results into question.

(4) Criteria and method of assessing results. A material which explodes (positive (+) result) in this test may not be classed as Hazard Division 1.5. An explosion is indicated by observations of events such as a loud noise and/or projections of fragments from the fire area.

d. Princess incendiary spark test (UN Test 5(d)).

(1) Introduction. This test is used to determine the ease of ignition of an explosive substance by incendiary sparks produced by a length of safety fuse. If a substance ignites in the test it must be assumed that it is not a very insensitive explosive substance.

(2) Apparatus and materials. The apparatus consists of a borosilicate test tube suitably clamped in a vertical position open end upwards. The fuse is a gunpowder filled time delay fuse, burning velocity 10 +/- 1 mm/sec (0.4. +/- 0.04 in/sec). (See fig 5–22.)

3. Procedure. The substance is normally tested in powder form. If necessary, it may be crushed and passed through an 850 μm (0.0335 in) sieve. Propellants are either ground and passed through a 1 mm (0.04 in) perforated plate sieve or discs 4 mm (0.16 in) diameter by 2 mm (0.08 in) thick are cut from the solid. Three grams (46 grains) of the substance under test are weighed into the test tube which is then gently tapped to flatten the surface of its contents. The fuse with one square cut end is placed with that end resting centrally on the surface of the sample. The other end is lit by suitable means. The event is observed visually and the response is recorded.

(4) Criteria and method of assessing results. A negative (-) result occurs if the substance fails to ignite on five consecutive trials with different samples for each trial. A positive (+) result occurs if the substance either ignites and burns (mildly or vigorously) or explodes at any time.

5–7. UN Test Series 6 (mandatory for Hazard Divisions 1.1, 1.2, 1.3 and 1.4)

These tests are conducted to answer the question "Which Hazard Division (1.1, 1.2, 1.3 and 1.4) corresponds most closely to the behavior of the product?" The test series includes internal ignition or initiation, propagation of burning or explosion, and fire tests of products. The geometrical arrangement of the products should be realistic in regard to the packing method and the conditions of transport and storage should be such as to produce the most disadvantageous test results. Note that airblast data collection, evaluation and interpretation; fragment collection, fragment hazard evaluation and interpretation; and thermal effects data collection, evaluation and interpretation guidelines are provided in Chapter 6. Note that testing can be curtailed if the product is expected to be Hazard Division 1.1 and the fragment hazard range does not exceed the default value (para 6–5*a*(3)(a)).

a. Single package test (UN Test 6(a)).

(1) Introduction. This test is conducted three times with single packages for the purpose of determining:

(a) Whether initiation or ignition in the package causes burning or explosion and whether burning or explosion is propagated within the package, and

(b) In what way the surroundings could be endangered by these effects.

Note. If reaction effects are expected to propagate outside the packaging, then the Single Package Tests (Test 6(a)) are not required. In this case, proceed directly to the Stack Tests (Test 6(b)).

(2) Apparatus and materials. A detonator or an igniter sufficient to ensure ignition of the substance or article to be tested is required, together with suitable confining materials. Figure 5–23 illustrates the use of a steel plate beneath the package which can be used to witness the event. Blast measuring equipment may be used. No other specific apparatus or materials are needed.

(3) Procedure.

(a) For packaged substances:

1. If the substance is intended to function by detonation, it is tested with a standard detonator (see fig 5–4).

2. If the substance is intended to function by deflagration, it is tested first with a standard detonator (see fig 5–4). If it doesn't detonate, then the subsequent two tests are conducted with an igniter sufficient (but not more than 30 g (460 grains) of fffg black powder or the same type and weight of igniter material designed to ignite the substance in the propulsion charges to achieve the deflagration function, whichever is the more energetic one) to ensure ignition of the substance within the package.

3. Substances not intended for use as explosives, but provisionally accepted into Class 1, are tested first with a standard detonator as in 1. above (three tests) and, if no explosion occurs, with an igniter as in 2. above (three tests).

(b) For packaged articles:*

1. Articles provided with their own means of initiation or ignition: The functioning of an article near the center of the package is stimulated by the article's own means of initiation or ignition. Where this is impractical, the article's own means of initiation or ignition is replaced by another form of device which provides similar input stimulus.

2. Articles not provided with their own means of initiation or ignition:

• An article near the center of the package is caused to function in the designed mode, or

• An article near the center of the package is replaced by another article which can be caused to function with the same effect.

Note. *Subject to the proviso that in the case of articles containing a very small quantity of substance(s) Compatibility Group A only, a sufficient number of these or equivalent items are initiated simultaneously to cause not less than 0.2 g (3 grains) of primary explosive to explode.

(c) The package is placed on a steel witness plate on the ground. The preferred method of confinement consists of containers, similar in shape and size to the test package, completely filled with earth or sand and placed as closely as possible around the test package to a minimum thickness of confinement in every direction of 0.5 m (1.5 ft) for a package not exceeding 0.15 m^3(5.3 ft^3) or 1 m (3 ft) for a package greater than 0.15 m^3(5.3 ft^3). Alternative methods of confinement are to use boxes or bags filled with earth or sand placed around and on top of the package or to use loose sand.

(d) Observations are made on the following: Evidence of thermal effects, detonation, deflagration or explosion of the total contents of the package.

(4) Criteria and method of assessing results.

(a) Explosion of the total contents indicates a candidate for Hazard Division 1.1. Evidence of such an indication includes:

1. A crater at the test site.

2. Damage to the witness plate beneath the package.

3. Measurement of a blast.

4. Disruption and scattering of most of the confining material.

(b) If the product is accepted as Hazard Division 1.1 and the fragment hazard range does not exceed the default value of 381 m (1250 ft) (para 6–5*a*(3)(a)), for example, fragments from Test 6(a) do not travel beyond 381 m, or they are asessed to be non-hazardous, further testing is not necessary, otherwise proceed to Test 6(b).

(c) If reaction effects are contained within the packaging then the Stack Tests (Test 6(b)) are not required. In this case, proceed to the External Fire (Bonfire) Test 6(c).

b. Stack test (UN Test 6 (b)).

(1) Introduction.

(a) This test is conducted three times with stacks of packages of an explosive product or stacks of non-packaged articles (if that is how they are transported/stored) for the purpose of determining:

1. Whether burning or explosion in the stack is propagated from one package to another or from one non-packaged article to another; and

2. In what way the surroundings could be endangered by this event.

(b) A variant of the stack test may be substituted for one of the three tests to characterize the fragment hazard for Hazard Division 1.1 ammunition. Method 1 (para 6–3*d*(1)) is the preferred replacement test series. Note that Method 1 consists of two tests with the stack raised off the ground, which employs ricochet barricades and the use of steel witness panels (fragment velocity/density) and collection bundles (fragment collection).

(2) Apparatus and materials. A detonator or an igniter just sufficient to ensure ignition of the substance or article to be tested is required, together with two or more samples of the product and suitable confining materials. A sheet, such as 3 mm (1/8 in) mild

steel, is required as a witness plate beneath the stack. Blast measuring and video equipment may be used. No other specific apparatus or materials are needed.

(3) Procedure.

(a) The test is applied to a stack of packages of an explosive product or a stack of non-packaged articles in the condition and form in which they are offered for transport. Sufficient packages or articles to give a total volume of 0.15 m^3(5.3 ft^3) are stacked on a steel witness plate on the ground. If the volume of an individual package (or non-packaged article) exceeds 0.15 m^3(5.3 ft^3) then the test is performed with at least one package or article (acceptor) placed in the position most likely to result in communication between the individual products (see para 5–7). If this position is not known, several acceptors are used. The preferred method of confinement consists of containers, similar in shape and size to the test packages completely filled with earth or sand and placed as closely as possible around the test package to create a minimum thickness of confinement in every direction of 1 m (3 ft). Alternative methods of confinement are to use boxes or bags filled with earth or sand placed around and on top of the stack or to use loose sand. If loose sand is used for confinement, the stack should be covered or protected to ensure that no sand falls into the interstices between adjacent packages or non-packaged articles. Articles carried without packaging are confined in a manner analogous to that used for packaged articles. Figure 5–24 presents a typical test arrangement.

(b) The decision to use either an initiating stimulus or an igniting stimulus is based on the following considerations:

1. For packaged substances:

• If the substance is intended to function by detonation, it is tested with a detonator (see fig 5–4).

• If the substance is intended to function by deflagration and the Test 6(a) series have not been conducted with the packaged substance, it is tested first with a standard detonator (see fig 5–4). If it doesn't detonate, then the subsequent two tests are conducted with an igniter as described below. If the substance is intended to function by deflagration and the Test 6(a) series have been conducted with the packaged substance, it is tested with an igniter just sufficient (but no more than 30 grams (460 grains) of fffg black power or of the same type and weight of igniter material designed to ignite the substance in the propulsion charges to achieve the deflagration function, (whichever is the more energetic one) to ensure ignition of the substance within one individual package.

• Substances not intended for use as explosives, but provisionally accepted into Class 1, are tested first with a detonator as above (three tests) and, if no explosion occurs, with an igniter as above (three tests).

2. For packaged articles and non-packaged articles:*

• Articles provided with their own means of initiation or ignition: The functioning of an article near the center of the package near the center of the stack is stimulated by the article's own means of initiation or ignition. Where this is impracticable, the article's own means of initiation or ignition is replaced by another form of stimulus having the required effect.

• Articles not provided with their own means of initiation or ignition:

•• An article near the center of the package near the center of the stack is caused to function in the designed mode, or

•• An article near the center of the package near the center of the stack is replaced by another article which can be caused to function with the same effect.

• The point of ignition or initiation is situated in a package near the center of the stack. Articles carried without packaging are tested in a manner analogous to that used for packaged articles

. • Observations are made on the following: Evidence of thermal effects, detonation and deflagration or explosion of the total contents of the packages.

Note. *Subject to the proviso that in the case of articles containing a very small quantity of substance(s) of Compatibility Group A only, a sufficient number of these or equivalent items are initiated simultaneously to cause not less than 0.2 g (3 grains) of primary explosive to explode.

(4) Criteria and method of assessing results. If in Test 6(b) explosion of virtually the entire contents occurs practically instantaneously, then the product is assigned to Hazard Division 1.1. Evidence of such an occurrence include:

(a) A crater at the test site appreciably larger than that given by a single package;

(b) Damage to the witness plate beneath the stack which is appreciably greater than that from a single package;

(c) Measurement of blast which significantly exceeds that from a single package;

(d) Violent disruption and scattering of most of the confining material.If the product is accepted as Hazard Division 1.1 and the fragment hazard range does not exceed the default value of 381 m (1250 ft) (para 6–5*a*(3)(a)), further testing is not required; otherwise proceed to Test 6(c).

Note. If two or less acceptor packages detonate in a confined stack test with four acceptor packages, then the packaged article can be hazard classified as Hazard Division 1.2; otherwise, it is hazard classified as Hazard Division 1.1.

c. External fire (bonfire) test (UN Test 6(c)).

(1) Introduction. This is a test on a stack of packages of an explosive product or a stack of articles (as configured for transport and storage) for the purpose of determining:

(a) How the packages or non-packaged articles in the stack behave when involved in an external fire; and

(b) Whether and in what way the surroundings are endangered by blast waves, thermal effects and/or fragment projection.

(2) Apparatus and materials. Firewood or liquid fuel is required and a suitable support (such as a metal grid) to hold the product together with three or more samples of the product and suitable means of ignition (for example sufficient liquid fuel to ensure ignition of a wood fire, 2 kg (4.5 lb) waste propellant, an electric igniter and a few grams of black powder). Three sheets, such as aluminum 200 x 200 x 0.2 cm (80 x 80 x 5/64 in), are required as witness screens together with suitable supports to hold them vertically. Regular video cameras are required to record events. Blast gauges, radiometers and associated recording equipment are also required.

(3) Procedure.

(a) The test is applied to a stack of packages of an explosive product or a stack of articles in the condition and form in which they are offered for transport. Where explosive articles are to be carried without packaging, the test is applied to the non-packaged articles. See paragraph 6–6 for alternate test procedures.

(b) Sufficient packages or articles to give a total volume, as packed, of not less than 0.15 m^3(5.3ft^3) or a minimum of three packages, whichever is the greater, are stacked together on a grid and exposed to external heating of sufficient intensity and duration as to bring the explosive substance contained in the packages or articles to reaction.

(c) The rate of heating should be credible in relation to what might occur in an accident during transportation, but it is not necessary to reproduce precisely all the conditions of a realistic fire. Suitable methods include a bonfire using brushwood, a wood fire using a lattice of wooden laths, a liquid fuel fire, a propane burner and a brazier.

(d) A proven method to produce a wood fire which has a balanced air/fuel ratio, thereby avoiding too much smoke which would obscure the events, and which burns with sufficient intensity and duration to bring many kinds of packaged explosives to reaction in 10 to 30 minutes is as follows: Air-dried pieces of wood (not more than 25-50 mm (1 in to 2 in) thick) are piled to form a lattice beneath the grid and around the stack of packages over a width of at least 50 cm (20 in) in every direction. The lateral distance between the laths should be about 10 cm (4 in). The whole should be drenched with suitable liquid fuel and the pile should be ignited on two sides simultaneously. Figure 5–25 shows the lattace arrangement. Other configurations are acceptable. It is recommended that enough fuel should be used to keep the fire burning for at least 30 minutes or for the time considered necessary.

(e) Test 6(c) is normally performed once; but, if the wood or

other fuel used for the fire is all consumed leaving a significant quantity of unconsumed explosive substance in the remains or in the vicinity of the hearth, then this test should be performed again using more fuel or a different method to increase the intensity and/or duration of the fire.

(f) The stack shall be supported with steel straps to retain this configuration during the test. It is usually necessary to place the stack of packages on a metal grid or scaffolding tubes between 0.5 m (1.5 ft) and 1 m (3 ft) above the ground to ensure adequate heating from below. Fuel is placed beneath the grid so that the fire engulfs the packages. Precautions against side winds must be observed to avoid dissipation of the heat. The test should not be performed under conditions when the wind speed exceeds 6 m/s (13 mph).

(g) A receptacle filled with a suitable liquid fuel or a combination of both wood and liquid fuel may be used as alternatives to the stack of wood beneath and around the grid. When liquid fuel is used, the surface area of the receptacle should be greater than that of the stack of wood on the grid. The distance between the grid platform and the receptacle is approximately 0.5 m (1.5 ft). Before using this method, consideration should be given to whether any quenching action or adverse interaction between explosives and fuel can occur such as might bring the results into question.

(h) A vertical witness screen, comprising an aluminum sheet 200 x 200 x 0.2 cm (80 x 80 x 5/64 in) or equivalent attached to suitable posts in the ground, is erected in each of three quadrants at a distance of 4m (13 ft) from the edge of the stack. The center of the screens should be raised to be level with the center of the packages if their center is above 1 m (3 ft). The downwind quadrant is not used for screens because prolonged exposure to flames may change the resistance of the aluminum sheets to projections.

(i) Observations are made on the following:

1. Evidence of detonation, deflagration or explosion of the total contents of the packages or non-packaged articles;

2. Potentially hazardous projections;

3. Thermal effects (for example, a fireball).

(4) Criteria and method of assessing results. The methodology used to determine the assignment of a Hazard Division based upon the results of Test Series 6 is illustrated in Figure 5–1 (Boxes 26, 28, 30, 32, 35 and 36). The following sections describe the assignment process.

(a) The article is classified as Hazard Division 1.1 if explosion of the total contents appears to occur instantaneously.

(b) The articles are classified as Hazard Division 1.2 if an explosion reaction (see Glossary) results in one or more of the following events:

Note. If two or less acceptor packages detonate in a confined stack test with four acceptor packages or more, then the packaged article can be hazard classified as Hazard Division 1.2; otherwise, it is hazard classified as Hazard Division 1.1.

1. Debris from the event perforates any of the three aluminum witness plates;

2. More than 10 metallic projections, each with mass exceeding 25 g (385 grains), are thrown more than 50 m (165 ft) from the edge of the stack;

3. Any metallic projection with mass exceeding 150 g (2300 grains) is thrown more than 15 m (50 ft) from the edge of the stack;

(c) The product, as packaged, is assigned to Hazard Division 1.3 if none of the events occurs which would require the product to be assigned to Hazard Divisions 1.1 or 1.2, but any one of the following events does occur:

1. A fireball which extends beyond any of the three witness screens;

2. A jet of flame which extends more than 3 m (10 ft) from the flames of the fire;

3. The irradiance of the burning product exceeds that of the fire by more than 4 kw/m^2(9.55 x 10^{-2}g-cal/cm^2-sec) at a distance of 15 m (50 ft) from the edge of the stack. The irradiance is measured over 5 seconds, during the period of maximum output. For substances, the value is corrected to correspond to a mass of 100 kg (220 lb) net explosive contents;

4. Fiery projections emanating from the product are thrown more than 15 m (50 ft) from the edge of the stack;

(d) The product, as packaged, is assigned to Hazard Division 1.4 and to a compatibility group other than Compatibility Group S if none of the events occurs which would require the product to be assigned to Hazard Divisions 1.1, 1.2 or 1.3, but any one of the following does occur:

1. Any indentation of any one of the three witness screens;

2. A projection, thermal effect or blast effect which would significantly hinder fire-fighting or other emergency response efforts in the immediate vicinity (i.e., 5 m (15 ft)) of the package;

(e) The product, as packaged, is assigned to Hazard Division 1.4 and to Compatibility Group S if none of the events occurs which would require the product to be assigned to Hazard Divisions 1.1, 1.2 or 1.3, or to Hazard Division 1.4 and a compatibility group other than Compatibility Group S, but a projection, thermal effect or blast effect occurs which would not significantly hinder fire-fighting or other emergency response efforts in the immediate vicinity (i.e., 5 m (15 ft)) of the package.

(f) If there are no explosive hazards at all, the product is considered for exclusion from Class 1. (Shown in Boxes 35 and 36 in figure 5–1.); however, evaluations of predominant hazard still applies (para 1–6).

1. If the product is an article manufactured with a view to producing a practical explosive or pyrotechnic effect, then:

• If there is some effect (projection, fire, smoke, heat or loud noise) external to the device itself,* the device is not excluded from Class 1 and the product, as packaged, is assigned to Division 1.4 and to Compatibility Group S;

• If there is no effect (projection, fire, smoke, heat or loud noise) external to the device itself,* the unpackaged device is excluded from Class 1 (see para 1–8).

Note. *Paragraph 1.11 of Chapter 1 of the UN Recommendations on the Transport of Dangerous Goods (App A, Ref 4) refers explicitly to the device, rather than the package, so it is usually necessary to make this assessment on the basis of a variant of Test 6(a) performed without packaging or confinement. Sometimes the stated effects are observed in Test 6(c) in which case the product is classified 1.4S without further tests.

2. If the product is not manufactured with a view to producing a practical explosive or pyrotechnic effect, it is excluded from Class 1. (Taken from para 1.11(c) of ST/SG/AC.10/1 (App A, Ref 4).

(g) See Chapter 6 for guidance on fragment collections, evaluations, and interpretations of airblast, thermal and fragment data.

5–8. UN Test Series 7 (mandatory for Hazard Division 1.6)

These tests are conducted to answer the question "Is the product an extremely insensitive explosive article; that is, does the behavior of the substance correspond closely to the criteria for Hazard Division 1.6?" There is only one compatibility group applicable for this hazard division, Compatibility Group N, which signifies that the product only contains extremely insensitive detonating substances (EIDS). The test series contains seven substance tests and four article tests. To be classified as EIDS, a substance must pass (negative (-) response)) all substance tests in Test Series 3 (3(a) (I)—Bureau of Explosives Impact Machine, 3(b)(iii)—ABL Friction Test, 3(c)—Thermal Stability Test at 75° C, and 3(d)(i)—Small-Scale Burning Test and Test Series 7 (7(a)— EDS Cap Test, 7(b)—EIDS Gap Test, 7(c) (i) Susan Test, 7(d) (i)— EIDS Bullet Impact Test, 7(e)—EIDS External Fire Test, and 7(f)— EIDS Slow Cookoff. Note that the Friability Test (7(c) (ii) and 7(d) (ii)) is an alternate test for the Susan Test and the EIDS Bullet Impact Test. To be classified as Hazard Division 1.6, an article must contain only EIDS and pass all Test Series 7 article tests (7(g)—1.6 Article External Fire Test, 7(h) — 1.6 Article Slow Cookoff Test, 7(j)—1.6 Article Bullet Impact Test, and 7(k)—1.6 Article Propagation Test.

a. EIDS cap test (UN Test 7(a)).

(1) Introduction. This test is designed to determine the sensitivity

of an EIDS candidate to the shock from a detonator or blasting cap. The test yields quantitative and unambiguous results.

(2) Apparatus and materials. The experimental set-up for this test is the same as for Test 5(a) (see figs 5–18 and 5–19).

(3) Procedure. The experimental procedure is the same as for Test 5(a) (see para 5–6*a*(3)).

(4) Criteria and method of assessing results. An explosive substance which detonates is too sensitive to be classified as an EIDS and the result is noted as positive (+).

b. EIDS gap test (UN Test 7(b)).

(1) Introduction. This test is used to measure the sensitivity of an EIDS candidate to a specified shock level, i.e., specified donor charge and gap.

(2) Apparatus and materials. The test consists of a 1.077 kg (2.376 lb) explosive charge (donor), a plexiglass barrier (gap), a container holding the potential EIDS (acceptor) and a steel witness plate (target). Figure 5–26 illustrates the test arrangement.

(3) Procedure.

(a) The standard detonator, donor, gap and acceptor charge are coaxially aligned above the center of the witness plate. A 1.6 mm (1/16 in) air gap is maintained between the free end of the acceptor charge and the witness plate with suitable spacers which do not overlap the acceptor charge. Care should be taken to assure good contact between the detonator and donor, donor and gap, and gap and acceptor charge. The test sample and a booster are to be at a temperature of 25°C +/−5°C at the time of the test.

(b) To assist in collecting the remains of the witness plate the whole assembly may be mounted over a container of water with at least a 100 mm (4 in) air gap between the surface of the water and the bottom surface of the witness plate which should be supported along two edges only.

(c) Alternative collection methods may be used, but it is important to allow sufficient free space below the witness plate so as not to impede plate puncture. The test is repeated three times.

(4) Criteria and method of assessing results. A clean hole punched through the plate indicates that a detonation was initiated in the sample. A substance which detonates in any trial is not an EIDS and the result is noted as positive (+).

c. Susan impact test (UN Test 7(c) (i)).

(1) Introduction. The Susan Impact Test is designed to assess the degree of explosive reaction under conditions of high velocity impact. The test is conducted by loading the explosives into standardized projectiles and firing the projectiles against a target at specified velocity.

(2) Apparatus and materials.

(a) The Susan test configuration is shown in Figure 5–27. The substance samples are contained in the projectile shown in Figure 5–28. The projectile contains a solid substance sample which is fabricated by normal techniques. The projectile has an assembled weight of 5.4 kg (12 lb), and contains approximately 0.45 kg (1 lb) of explosive.

(b) The projectiles are fired from a smoothbore gun at a smooth-surfaced target plate. Projectile impact velocity is obtained by adjusting the propellant charges in the gun. The flight path is about 1.2 m (4 ft) above ground level.

(c) The test site is equipped with calibrated blast gauges and recording equipment. The airblast recording system should have a system frequency response of at least 20 KHz. Measurements are made of impact velocities and air shock blast overpressure. Airblast is measured at a distance of 3.05 m (10 ft) from the impact point (gauges 1, 2 and 3 in fig 5–27). The gauges are positioned to take free-field overpressure measurements.

(3) Procedure.

(a) The propellant charge in the gun should be adjusted to produce a projectile velocity of 333 m/sec (1093 ft/sec) within a range of (+10%, −0%). The projectile is fired and the impact velocity and airblast produced as a result of its reaction on impact are recorded. If a velocity of 333 m/sec (1093 ft/sec) (+10%, −0%) is not obtained, the amount of propellant is adjusted and the test repeated.

(b) Once an impact velocity of 333 m/sec (1093 ft/sec) is obtained, the test is repeated until accurate pressure-time records are obtained from at least five separate shots. On each of these accurate shots, the impact velocity must be 333 m/sec (1093 ft/sec) (+10%, −0%).

(4) Criteria and method of assessing results. The maximum airblast overpressure that is determined from each airblast is recorded. A minimum of 10 records is necessary for a valid average. The average of the maximum pressures obtained is recorded. If the average pressure obtained by such a procedure is greater than or equal to 27 kPa (3.9 psi) (i.e., the blast overpressure that a like mass of cast TNT would produce at a velocity of 333 m/sec (1093 ft/sec)), then the substance is not an EIDS explosive and the result is noted as positive (+).

d. Friability test (UN Tests 7(c) (ii) and 7(d) (ii)).

(1) Introduction. The Friability Test is used to establish the tendency of a compact EIDS candidate to deteriorate dangerously under the effect of an impact.

(2) Apparatus and materials.

(a) The following is required to conduct the Friability test:

1. A device which can fire a cylindrical test sample at a velocity of 150 m/sec (492 ft/sec);

2. A steel impact plate (target);

3. A fragment recovery box;

4. A cylindrical test sample (illustrated in fig 5–29);

5. A closed vessel.

(b) Diagrams of the test setup are provided in Figures 5–29 through 5–31.

(3) Procedure. A bare sample (about 9g (140 grains)) of compact substance is projected at 150 m/sec (492 ft/sec) against the steel plate. The substance fragments produced by impacting the steel plate are collected (minimum 8.9 g (137 grains)). These collected fragments are loaded into a closed vessel at 20°C and ignited with a capsule containing 0.5 g (7.7 grains) of fffg black powder (average diameter 0.75 mm (0.03 in)). The pressure as a function of time produced by the burning substance is recorded using an appropriate pressure recording device. The data are analyzed to produce a plot of pressure derivative dp/dt as a function of pressure p (dp/dt = f(p)). Three tests are conducted.

(4) Criteria and method of assessing results. The substance is not an EIDS if the average maximum dp/dt is 15 MPa/ms (150 bars/ms) (positive (+) result) or greater.

e. EIDS bullet impact test (UN Test 7 (d) (i)).

(1) Introduction. The Bullet Impact Test is used to evaluate the response of a possible EIDS explosive substance to the kinetic energy transfer associated with impact and penetration of a given energy source (a 12.7 mm (0.5 in) projectile traveling at a specified velocity)).

(2) Apparatus and materials.

(a) Substance test samples fabricated by normal techniques are employed. The samples should have a length of 200 mm (7 7/8 in) and should be configured to fit snugly inside the device shown in Figure 5–32. The pipe is closed with steel or cast iron end caps, torqued to 204 Nm (150 ft-lb).

(b) The bullet is a standard 12.7 mm (0.50 in) armor-piercing bullet with a projectile mass of 46 g (710 grains), and is fired at the service velocity of about 820 +/- 60 m/sec (2700 +/- 200 ft/sec) from a 12.7 mm (0.5 in) gun. Figure 5–33 presents a typical test arrangement for the test.

(3) Procedure.

(a) A minimum of six test articles (explosive substance in capped steel pipe) should be fabricated for the tests.

(b) Each test article is positioned on a suitable pedestal at a convenient distance from the muzzle of the gun. Each test article is secured in a holding device upon its pedestal. This device should be capable of restraining the item against dislodgment by the bullet.

(c) A test consists of the firing of one projectile into each test item. There should be at least three tests with the test article oriented such that its long axis is perpendicular to the line of flight (i.e., impact through the side of the pipe). There should also be at least three tests with the test article oriented such that its long axis

is parallel to the line of flight (i.e., the impact will be through the end cap).

(d) Remains of the test container are collected. Complete fragmentation of the container is indicative of explosion or detonation.

(4) Criteria and method of assessing results. A substance which explodes or detonates in any trial is not an EIDS explosive and the result is noted as positive (+).

f. EIDS external fire test (UN Test 7 (e)).

(1) Introduction. The External Fire Test is used to determine the reaction of an EIDS candidate explosive to external fire when it is confined.

(2) Apparatus and materials. Substance test samples fabricated by normal techniques are employed. The samples should have a length of 200 mm (7 7/8 in) and should be configured to fit snugly inside the device shown in Figure 5–32. The pipe is closed with steel or cast iron end caps, torqued to 204 Nm (150 ft-lb). The test arrangement is identical to that of Test 6(c) (see para 5–7*c*(2) and fig 5–25).

(3) Procedure.

(a) The experimental procedure is the same as for Test 6(c) (see para 5–7*c*(3)) except as noted in paragraph 5–8*f*(3)(b) below.

(b) For substances, this test requires a minimum of five confined samples stacked horizontally and banded together. The test is conducted either on fifteen samples in one fire or on five samples in each of three fires. Color photographs are taken to document the condition of the samples after each test. Cratering and the size and location of confining pipe fragments are documented as an indication of the degree of reaction.

(4) Criteria and method of assessing results. An explosive substance which detonates or reacts violently with a fragment of mass exceeding 1 g (15 grains) and range more than 15 m (50 ft) is not an EIDS explosive substance and the result is noted as positive (+).

g. EIDS slow cookoff test (UN Test 7(f)).

(1) Introduction. This is a test on a possible EIDS explosive substance. It is used to determine reaction to a gradually increasing thermal environment and the temperature at which such reaction occurs.

(2) Apparatus and materials.

(a) Substance test samples fabricated by normal techniques are employed. The samples should have a length of 200 mm (7 7/8 in) and should be configured to fit snugly inside the device shown in Figure 5–32. The pipe is closed with steel or cast iron end caps, torqued to 204 Nm (150 ft-lb).

(b) The sample assembly is placed in an oven which provides a controlled thermal environment over a 40°C to 365°C temperature range and can increase the temperature of the surrounding oven atmosphere at the linear rate of 3.3°C per hour throughout the temperature operating range and ensure, by circulation or other means, a uniform thermal environment to the item under test. A means of relief should be provided for increased air pressure that is generated in the oven due to heating. A typical test arrangement is given in Figure 5–34.

(c) Temperature recording devices are used to monitor temperature at intervals of every 10 minutes (or less); continuous monitoring is preferred. Instrumentation with an accuracy of +/- 2% over the test temperature range is used to measure the temperature of:

1. The air within the oven; and

2. The exterior surface of the steel pipe.

(3) Procedure.

(a) The test item is subjected to a gradually increasing air temperature at a linear rate of 3.3°C per hour until reaction occurs. Temperatures and elapsed test time are measured and recorded.

(b) Color photographs are taken to document the condition of the unit and the test equipment before and after the test. Cratering and the size and location of any fragments are also documented as indications of the degree of reaction.

(c) Three tests are conducted for each candidate substance.

(4) Criteria and method of assessing results. After the completion of each test, the pipe or any fragments of pipe are recovered in the test area and examined for evidence of violent explosive reaction. Such evidence may include data on the number and size of recovered fragments of explosive or pipe, as well as the distances to which they were thrown. A substance which detonates or reacts violently (fragmentation of one or two end caps and fragmentation of the tube into more than three pieces) is not considered an EIDS and the result is noted as positive (+).

h. The 1.6 article external fire test (UN Test 7(g)).

(1) Introduction. The external fire test is used to determine the reaction of a possible Hazard Division 1.6 article to external fire as presented for transport.

(2) Apparatus and materials. The experimental set-up for this test is the same as for Test 6(c) (see para 5–7*c*(2) and fig 5–25)).

(3) Procedure. The experimental procedure for this test is the same as for Test 6(c) (see para 5–7*c*(3)).

(4) Criteria and method of assessing results. For assessing results use the criteria as for Test 6(c), paragraphs 5–7*c*(4)(b) - 5–7*c*(4)(d). If none of the events which would require the article to be confined to Hazard Divisions 1.1, 1.2 or 1.3 occur, then the article can be considered as a Division 1.6 article, and the result is noted as negative (-). See Chapter 6 for collection, evaluations and interpretations of airblast, thermal and fragment data.

i. 1.6 article slow cookoff test (UN Test 7(h)).

(1) Introduction. The 1.6 Article Slow Cookoff is a test on a possible Hazard Division 1.6 article. It is used to determine reaction to a gradually increasing thermal environment and the temperature at which such reaction occurs.

(2) Apparatus and materials.

(a) The test equipment consists of an oven which provides a controlled thermal environment over a 40°C to 365°C temperature range and can increase the temperature of the surrounding oven atmosphere at the linear rate of 3.3°C per hour throughout the temperature operating range, minimize hot spots, and ensure (by circulation or other means) a uniform thermal environment to the item under test. Secondary reactions (such as those caused by exudate and explosive gases contacting the heating devices) invalidate the test, but these can be avoided by providing a sealed inner container to surround articles shipped bare. A means of relief should be provided for the increased air pressure that is generated by the test due to heating. A typical test arrangement is shown schematically in Figure 5–34.

(b) Temperature recording devices (permanent record types) are used to monitor temperature continuously or at least every 10 minutes. Instrumentation with an accuracy of +/-2% over the test temperature range is used to measure the temperature at:

1. The atmosphere air gap adjacent to the unit under test; and

2. The exterior surface of the unit.

(3) Procedure.

(a) The test item is subjected to a gradually increasing air temperature at a linear rate of 3.3°C per hour until reaction occurs. Temperatures and elapsed test time are measured and recorded.

(b) Color still photographs are taken to document the condition of the unit and the test equipment before and after the test. Cratering and fragment size are documented as an indication of the degree of reaction.

(c) The test is conducted on two separate articles as presented for transport.

(4) Criteria and method of assessing results. If there is a reaction more severe than burning, the result is noted as positive (+) and the item is not classified as Hazard Division 1.6. The energetic material may ignite and burn and the case may melt or weaken sufficiently to allow mild release of the combustion gases. Burning should be such that case debris and package elements stay in the area of test except for case closures which may be dislodged by the internal pressure and thrown not more than 15 meters (50 ft).

j. 1.6 article bullet impact test (UN Test 7(j)).

(1) Introduction. The Bullet Impact Test is used to evaluate the response of a possible Hazard Division 1.6 article to the kinetic energy transfer associated with the impact and penetration by a given energy source.

(2) Apparatus and materials. A 12.7 mm (0.5 in) gun is used to fire service 12.7 mm (0.5 in) armor-piercing (AP) ammunition with

a projectile mass of 46 g (710 grains) and with standard propellant load. The gun should be fired by remote control and be protected from fragment damage by firing through a hole in a heavy steel plate. The firing gun muzzle should be at a range of 3 - 20 m (10-65 ft) from the test item depending upon the explosive weight of the item. The test item should be secured in a holding device capable of restraining the item against dislodgment by projectiles. The test is recorded visually with video or cine equipment. Figure 5–35 presents a typical test arrangement.

(3) Procedure. The test consists of subjecting an all-up (complete) EIDS loaded item to a three-round burst fired at 856 +/- 9 m/sec (2800 +/- 30 ft/sec) velocity with an equivalent 600 +/- 50 rounds/min rate of fire and impacting within a circular target area of 50 mm (2 in) diameter. The rounds are aimed so as not to pass through the same hole. The test is repeated in three different orientations. In the appropriate orientation(s) the striking point on the test item for the multiple impact is selected so that the impacting rounds penetrate the most sensitive material(s), that is not separated from the main explosive charge by barriers or other safety devices. The degree of reaction is determined by post-test inspection of test film and hardware.

(4) Criteria and method of assessing results. For an item to be considered as a Hazard Division 1.6 article, there should have been no detonation (or explosion) resulting from any of the tests. Reactions of the article identified as no reaction, burning, or deflagration are considered as negative (-) test results.

k. 1.6 article propagation test (UN Test 7(k)).

(1) Introduction. The Propagation Test is used to determine if a possible Hazard Division 1.6 article will detonate a similar item adjacent to it, in the condition as presented for transport and or storage.

(2) Apparatus and materials. Two or more of the articles to be tested are required, one of which should be provided with their normal means of initiation. Where the article is not fitted with its own means of initiation or its own means of initiation cannot be functioned practicably then a stimulus of similar power should be provided. Video or cine equipment should be used to record the test visually. No other specific apparatus or materials are needed although blast measuring equipment may also be used.

(3) Procedure.

(a) The test is applied to an array of articles in the condition and form in which they are offered for transport and or storage. Where explosive articles are to be carried without packaging, the tests are applied to the non-packaged articles. The test is performed with at least one acceptor placed in the position most likely to result in communication between the articles. If this position is not known several acceptors are used.

(b) If the article is provided with its own means of initiation then the donor article should be functioned by its own initiation system. Where this is impracticable the article's own means of initiation is replaced by another form of stimulus having the required effect. If the article is not provided with its own means of initiation then it should be caused to function in its designed mode.

(c) The test is to be conducted at least three times, unless a detonation of an acceptor occurs earlier. The first test is conducted without confinement and the next two tests are conducted with confinement as with Test 6(b). See paragraph 5–7*b*(3) and Figure 5–24 for additional discussions on procedures and for a typical test arrangement, respectively. The unconfined test permits the collection of airblast/fragment data without the attenuating effects of confinement, whereas the confined test subjects the acceptors to a more severe environment. Record the size and location of any fragments produced by each test.

(4) Criteria and method of assessing results. Fragment data (size and number of acceptor article fragments) and crater dimensions (and/or witness plate damage) are used to determine whether or not any acceptor detonated. Blast data and the video or cine records of each test may be used to supplement this decision. For an item to be considered as a Hazard Division 1.6 article, it should have demonstrated no propagation (detonation of an acceptor) as a result of this test. Acceptor article responses identified as no reaction, burning or deflagration are considered as negative (-) results. See Chapter 6 for guidance on fragment collection, evaluation and interpretations of airblast, thermal and fragment data.

5–9. Additional test

Flash point (ASTM D56–87).

a. Introduction. A summary of the ASTM test used to determine the flash point of liquid substances is provided in this section. The flash point measures the tendency of the substance to form a flammable mixture with air under controlled laboratory conditions. This test should be run remotely for materials suspected to be explosive. Variations on this test method should be examined to determine vapor flammability characteristic of the sample material and the explosive hazard including testing in an open cup (see App A, Ref 9).

b. Apparatus and materials. A Tag Closed Tester, (App A, Ref 9) illustrated in Figure 5–36, is used to conduct the test. The liquid substance to be tested is contained in a 50 +/- 0.5 ml (3 +/- 0.03 in^3) container. The standard brass cup may be replaced with a compatible test container.

c. Procedure. Condition the substance sample at 27 +/- 5°C or 11°C below the predicted flash point, whichever is lower. Heat the substance using the sample heater either at 1°C/min for substances having a flash point below 60°C or 3°C/min for substances having a flash point above 60°C. When the sample is 5°C below the expected flash point, introduce the test flame into the apparatus vapor space for one second in a smooth motion. Repeat introduction of the test flame after each 1°C rise in sample temperature until there is a distinct flash in the vapor space or an explosion occurs. Do not confuse the true flash with the bluish halo which sometimes surrounds the test flame during applications immediately preceding the true flash.

d. Criteria and method of assessing results. The temperature (less than or equal to 95°C) at which there is a true flash in the test apparatus vapor space will be recorded as the flash point for the substance. A flash point less than or equal to 95°C is considered a positive (+) response (failure)

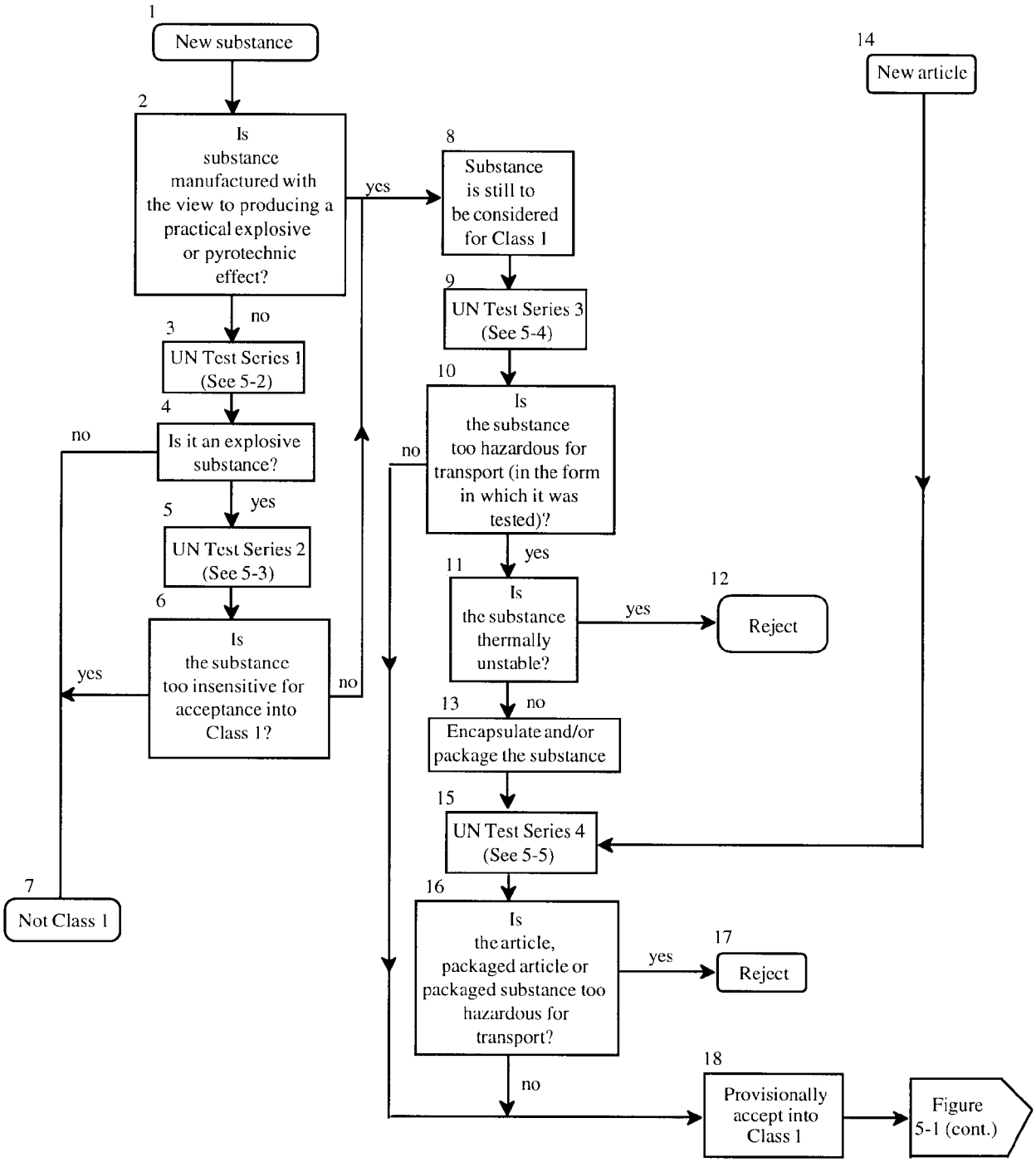

See Paragraph 5-1.*b*.

Figure 5-1. UN hazard classification procedures for articles and substances

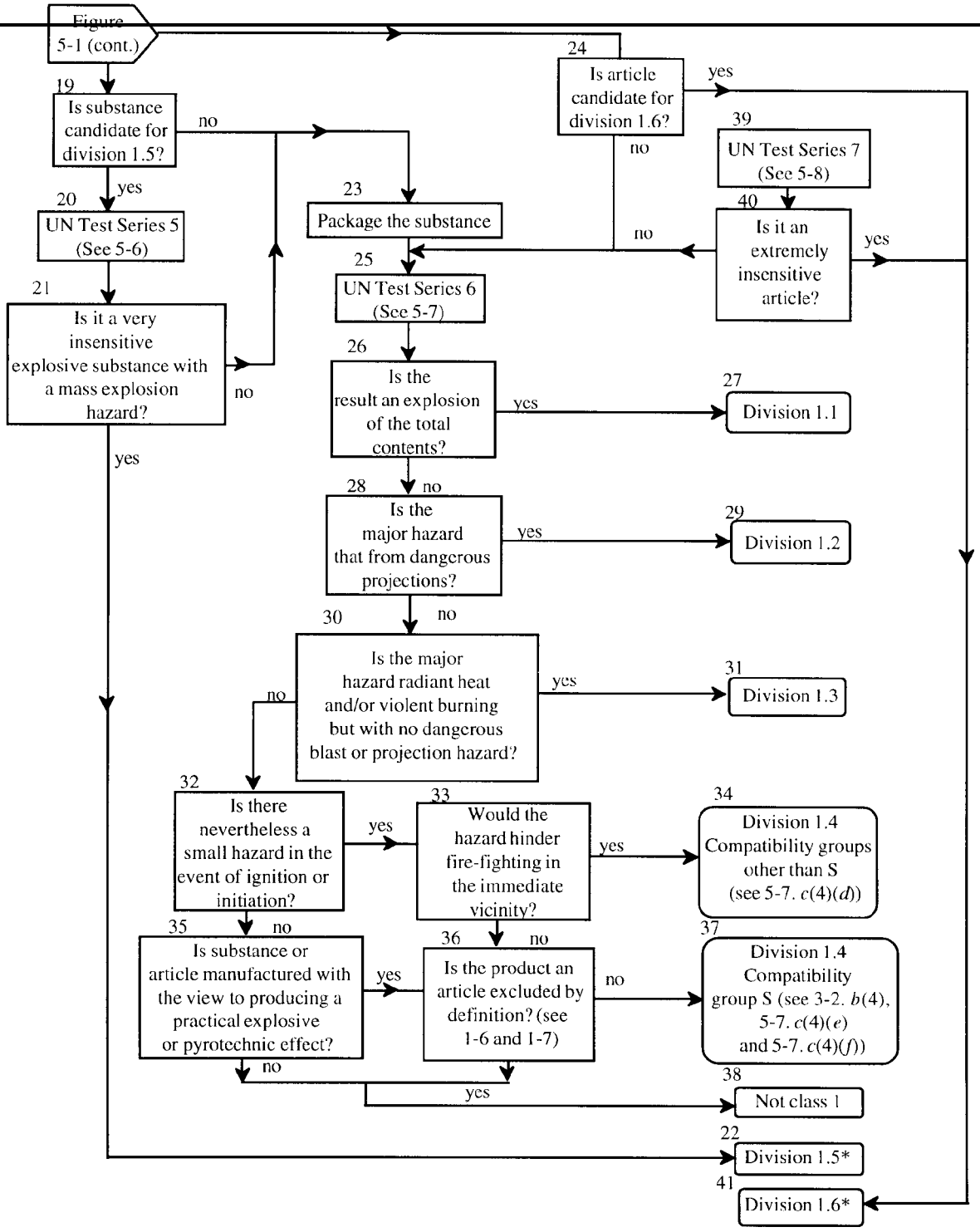

*Hazard Division 1.6 articles contain extremely insensitive detonating substances (EIDS) which pass the substance tests in Test Series 7. If an EIDS is to be shipped separately as Hazard Division 1.5, then the EIDS must pass Test Series 5.
See Paragraph 5-1.*b*.

Figure 5-1A. UN hazard classification procedures for articles. and substances (cont.)

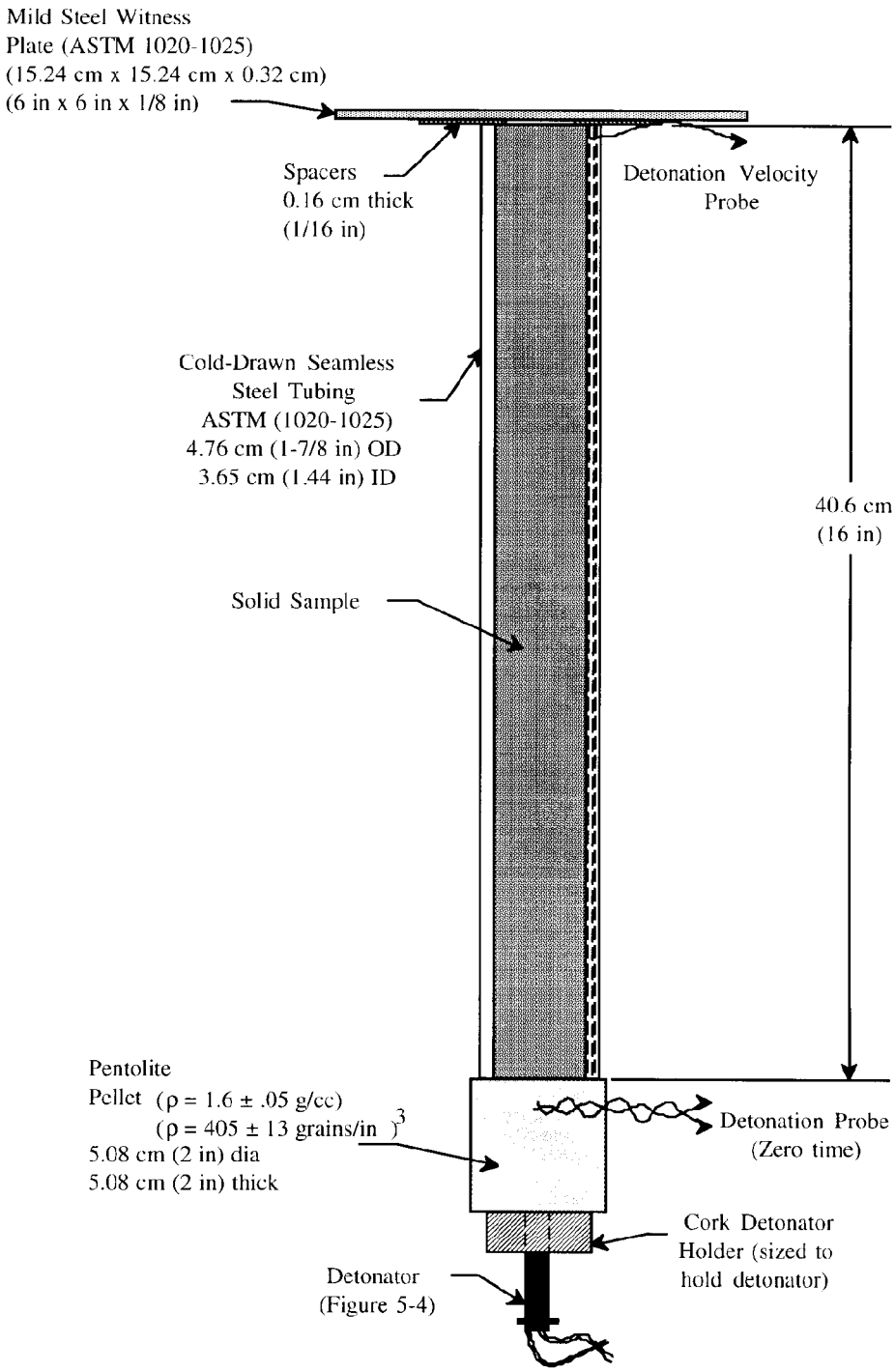

NOT TO SCALE

See Paragaph 5-2.*a*.

Figure 5-2. Gap test configuration for solid substances - UN Test 1(a) (iii)

Figure 5-2. Gap test configuration for solid —UN Test 1(a) (iii)

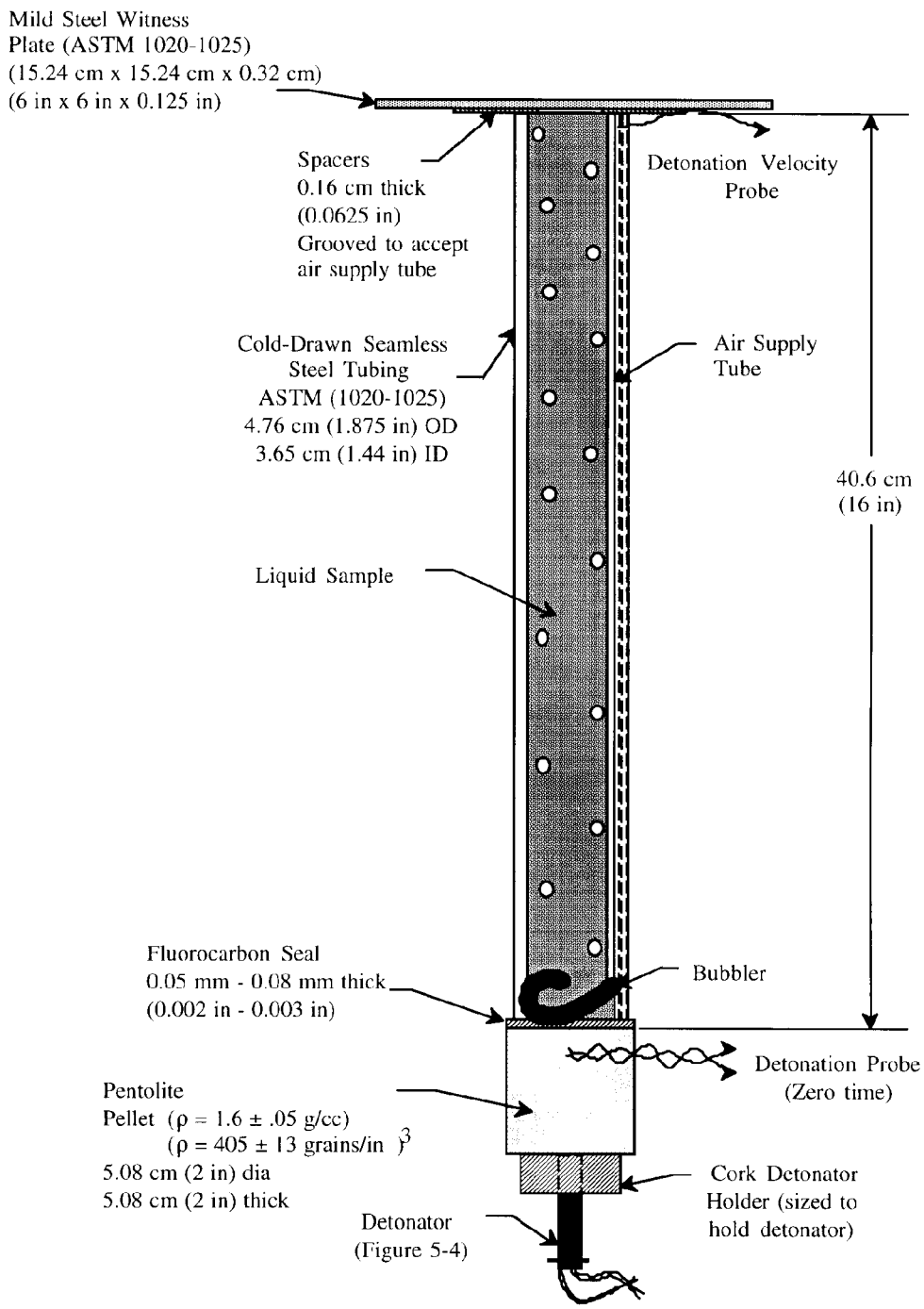

NOT TO SCALE

See Paragraph 5-2.*a*.

Figure 5-3. Gap test configuration for liquid substances—UN Test 1(a) (iii)

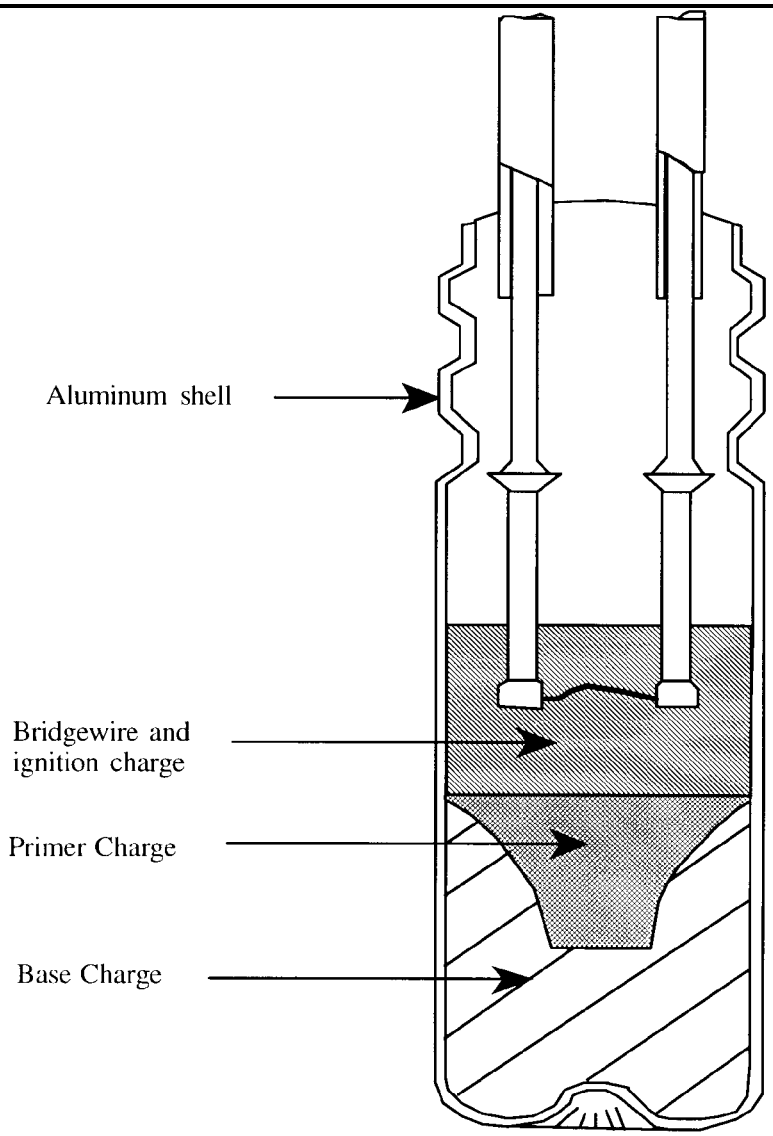

Specifications -
Shell:

Material -	5052 Aluminum Alloy
Length -	31.8 mm (1.25 in)
Diameter -	7.06 mm (9/32 in)
Wall Thickness -	0.19 mm (0.0075 in)

Primer Charge: 0.195g (3 grains) dextrinated lead azide
Base Charge: 0.447 ± 0.019g (6.90 ± 0.29 grains) PETN pressed at 29 Mpa (280 Bars)

NOT TO SCALE

Notes: Non-electric/electric number eight detonator or equivalent energy output may be used. See Figures 5-2, 5-3, 5-7, 5-8, 5-18, 5-19, 5-26 and 6-10.

Figure 5-4. Number eight (USA) detonator

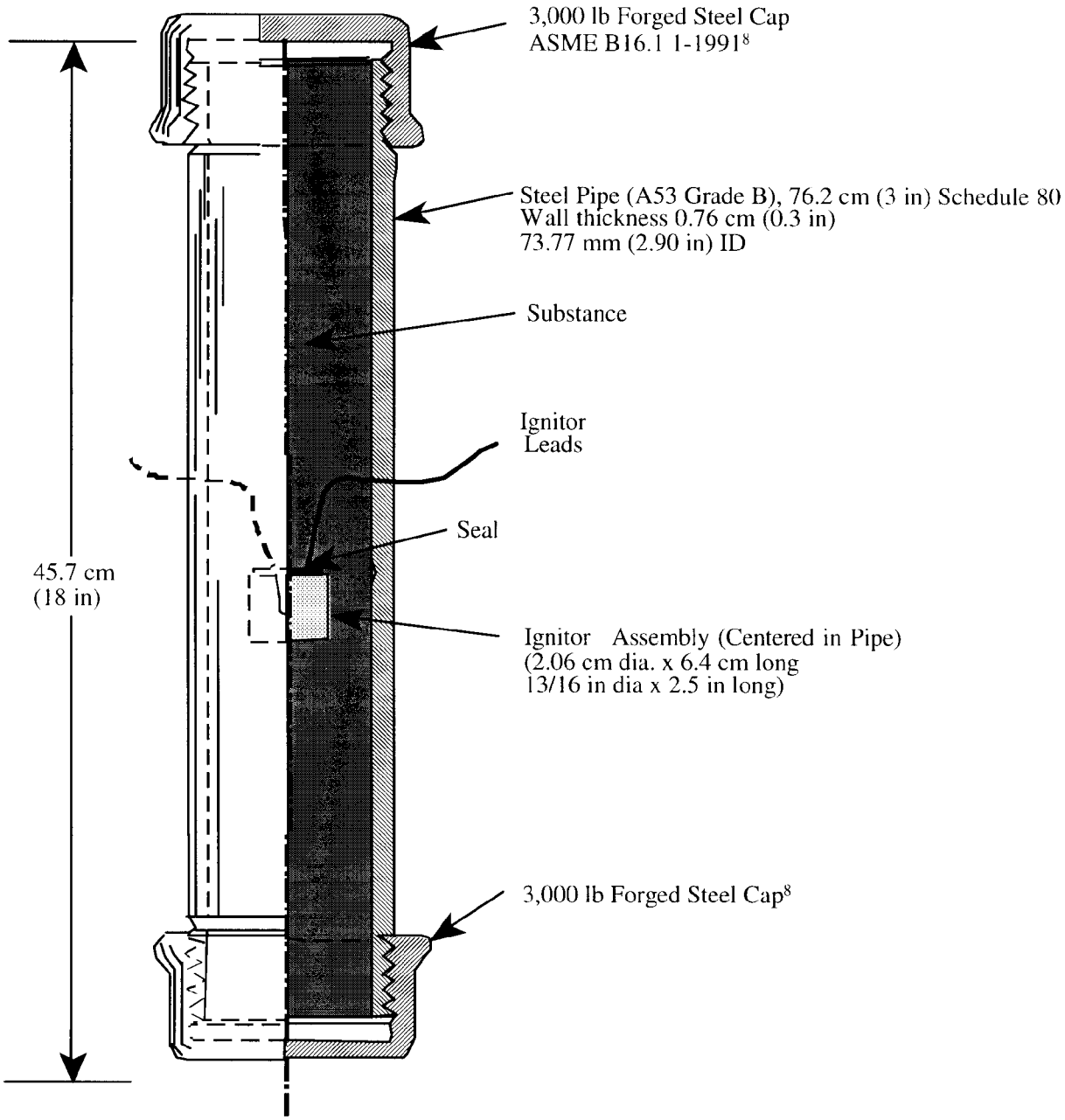

NOT TO SCALE

[8]ASME B16.11-1991, "Forged Fittings, Socket-Welding and Threaded," American Society of Mechanical Engineers, New York, NY (latest revision).

See Paragraph 5-2.*b*.

Figure 5-5. Internal ignition test—UN Tests 1(b) (ii) and 2(b) (ii)

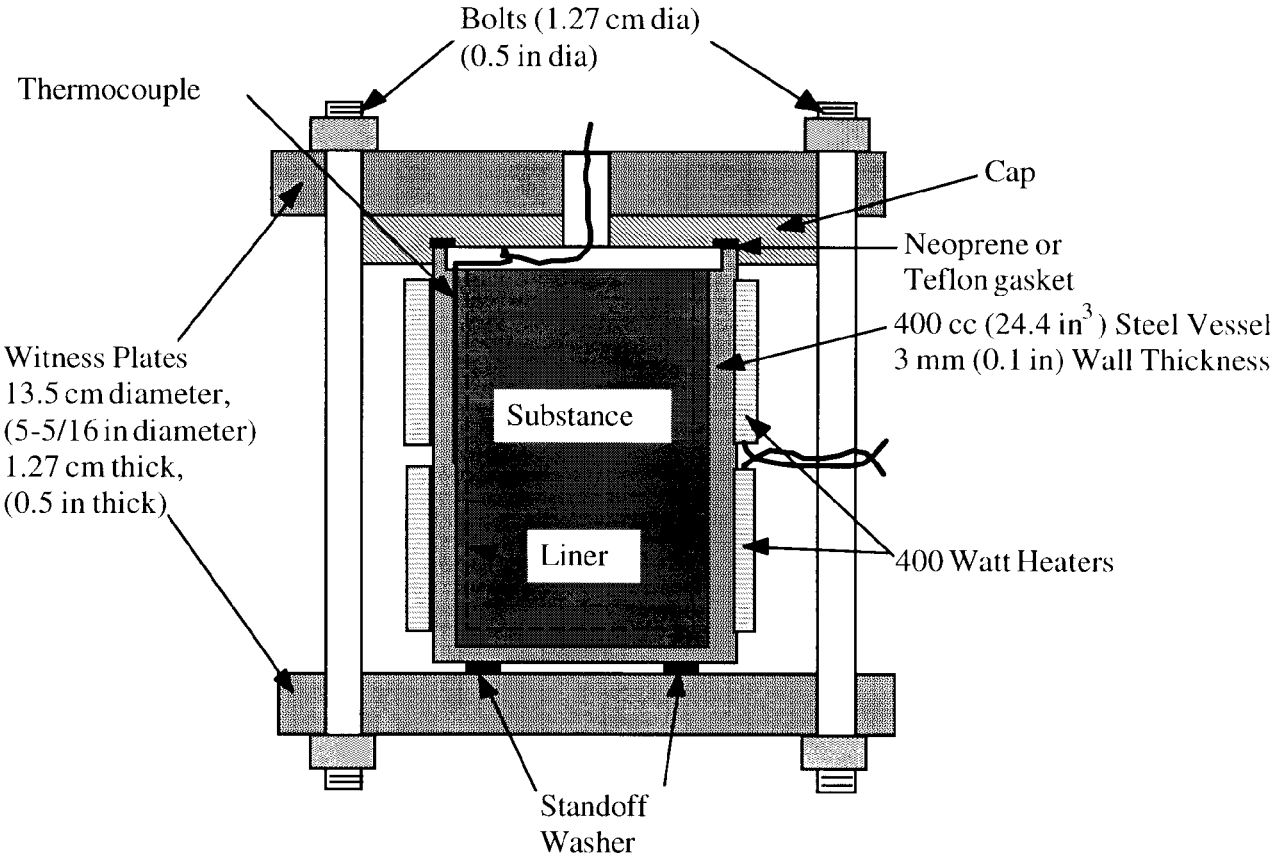

NOT TO SCALE

See Paragraph 5-2.*c*.

Figure 5-6. Slow cookoff bomb test device - UN Tests 1(b) (iii) and 2(b) (iv)

Figure 5-6. Slow cookoff bomb test device—UN Tests 1(b) (iii) and 2(b) (iv)

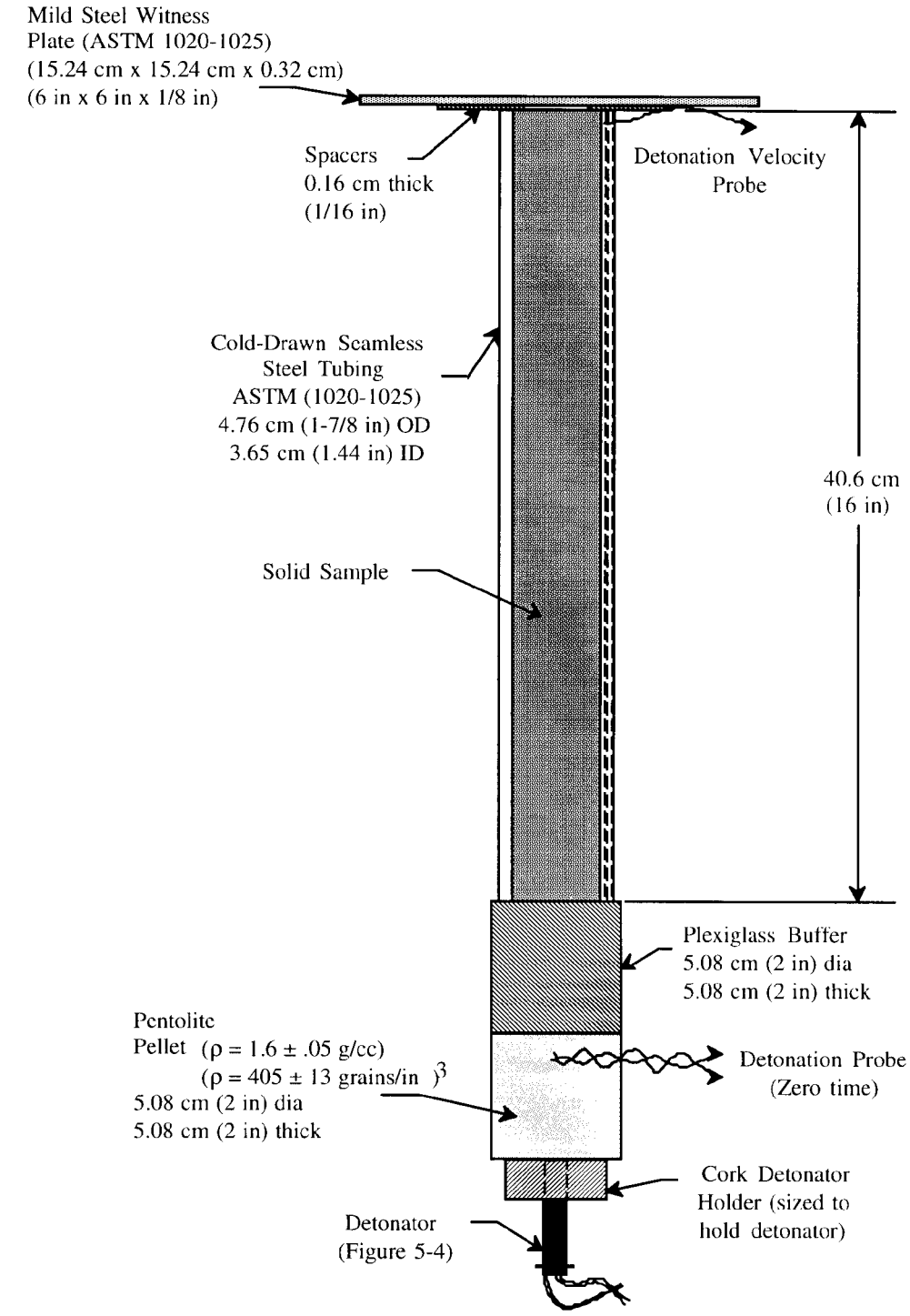

NOT TO SCALE

See Paragraph 5-3.*a*.

Figure 5-7. Gap test configuration for solid substances—UN Test 2(a) (iii)

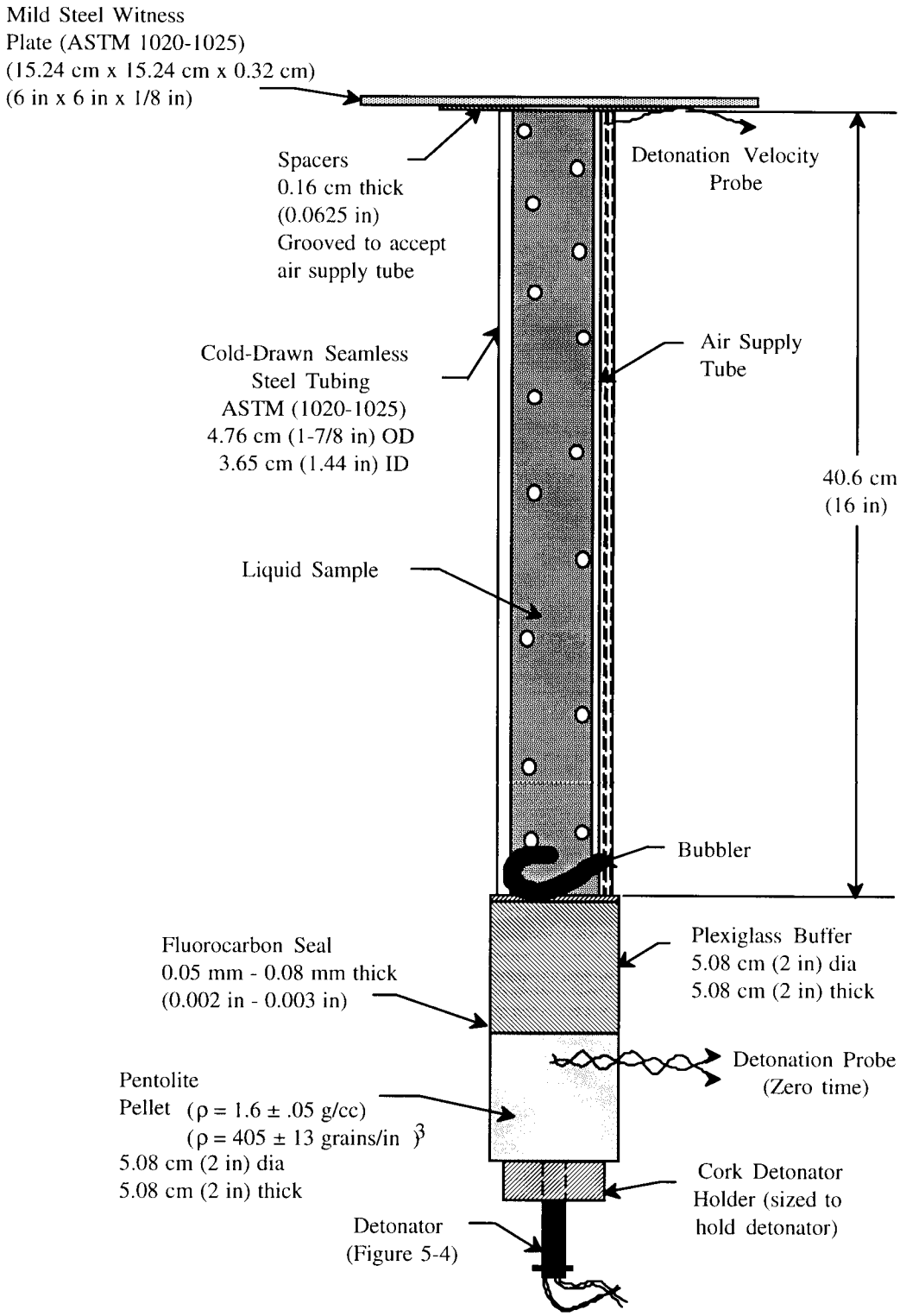

NOT TO SCALE

See Paragraph 5-3.*a*.

Figure 5-8. Cap test configuration for liquid substances—UN Test 2(a) (iii)

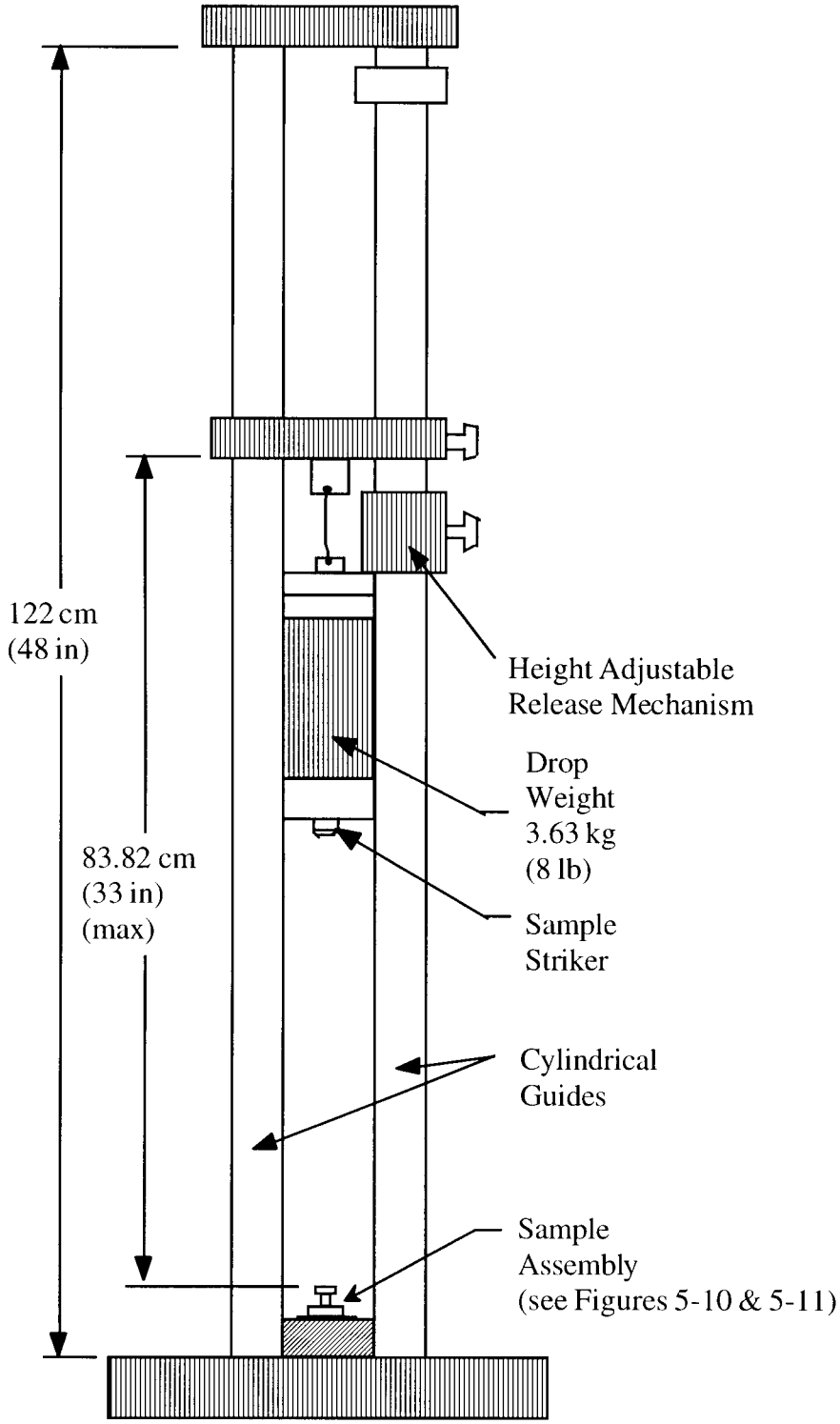

NOT TO SCALE

See Paragraph 5-4.*a*.

Figure 5-9. Bureau of explosives impact machine—UN Test 3(a) (i)

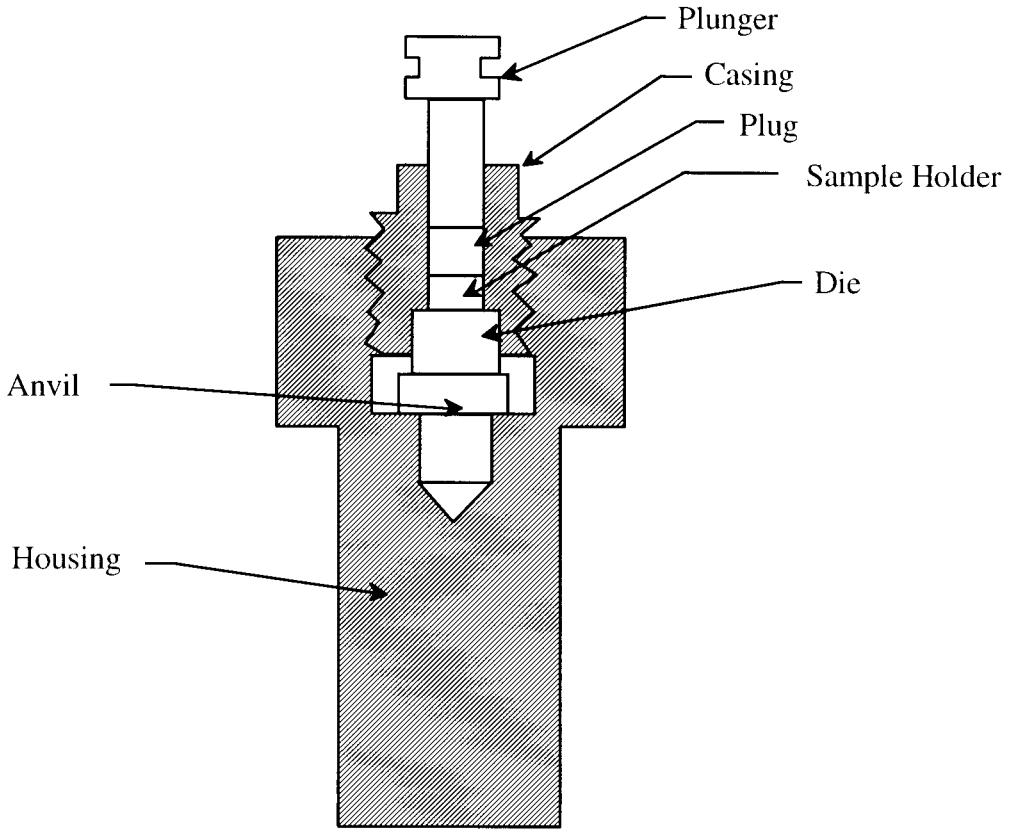

NOT TO SCALE

See paragraph 5-4.*a*.

Figure 5-10. Bureau of explosives impact machine sample assembly for solid substances—UN Test 3(a) (i)

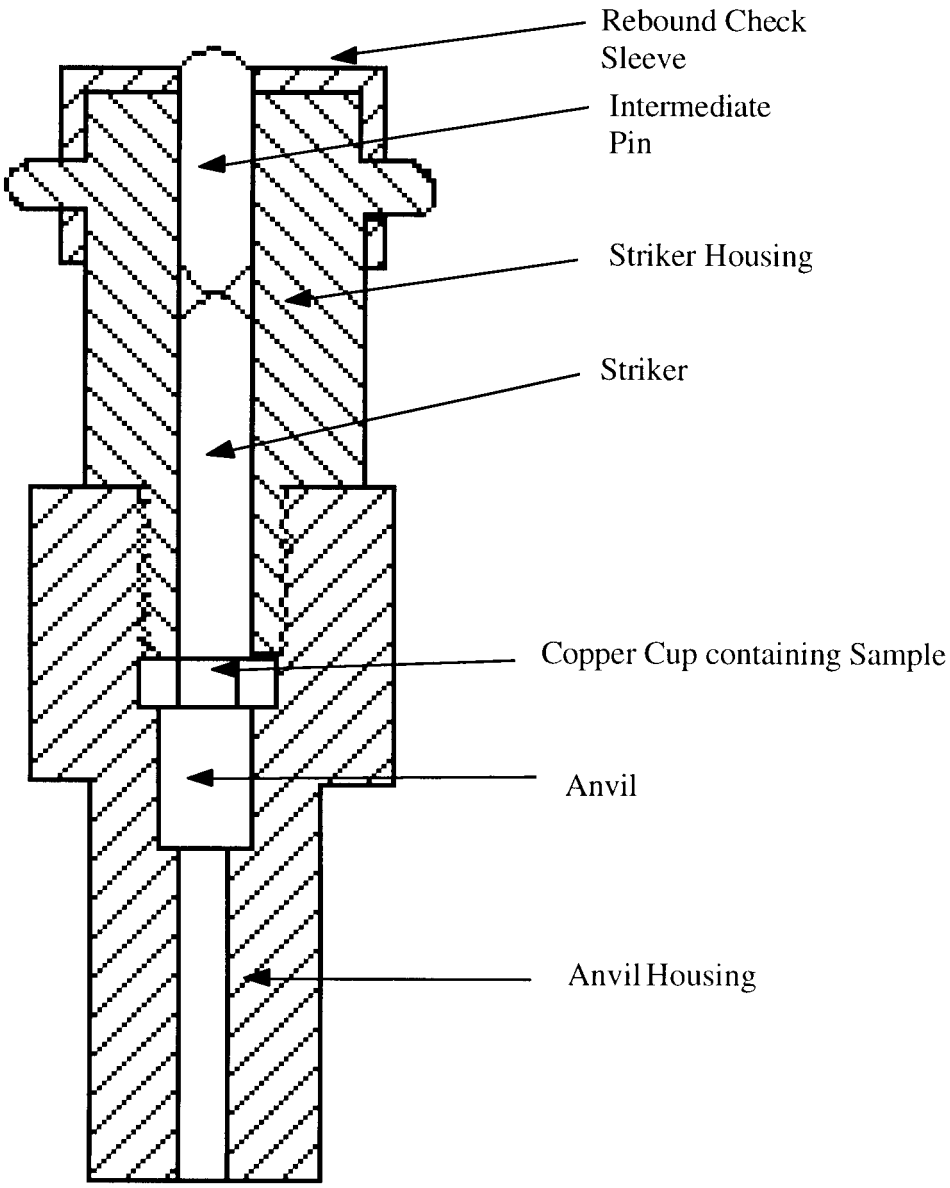

NOT TO SCALE

See Paragraph 5-4.*a*.

Figure 5-11. Bureau of explosives impact machine sample assembly for liquid substances—UN Test 3(a) (i)

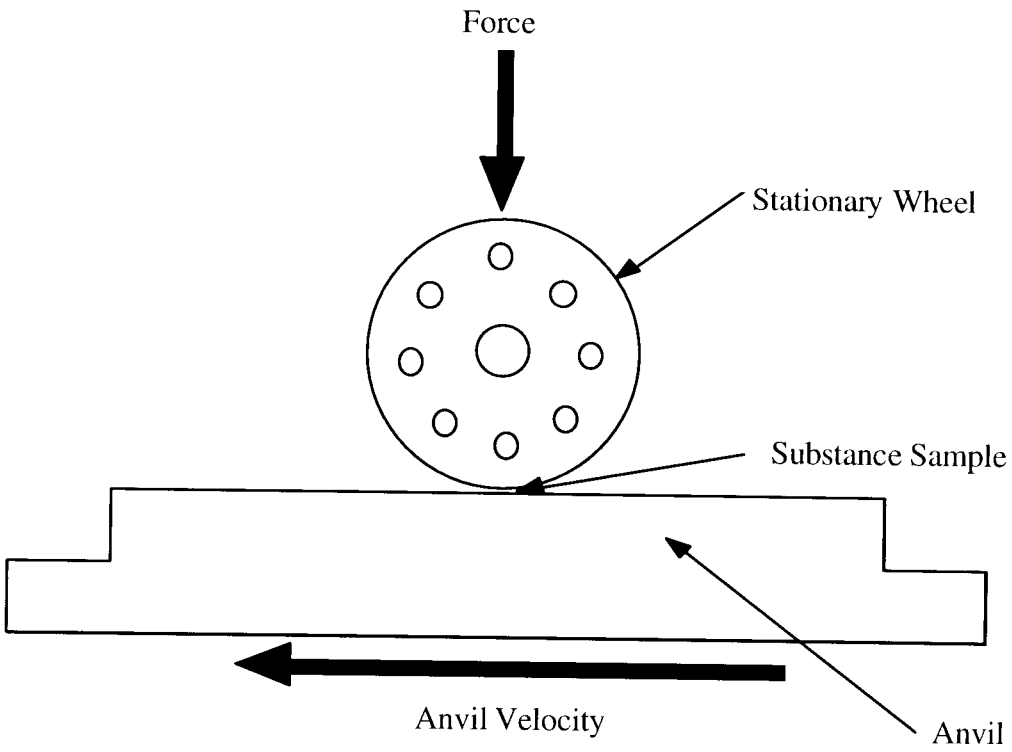

NOT TO SCALE

See Paragraph 5-4.*b*.

Figure 5-12. ABL friction test configuration—UN Test 3(b) (iii)

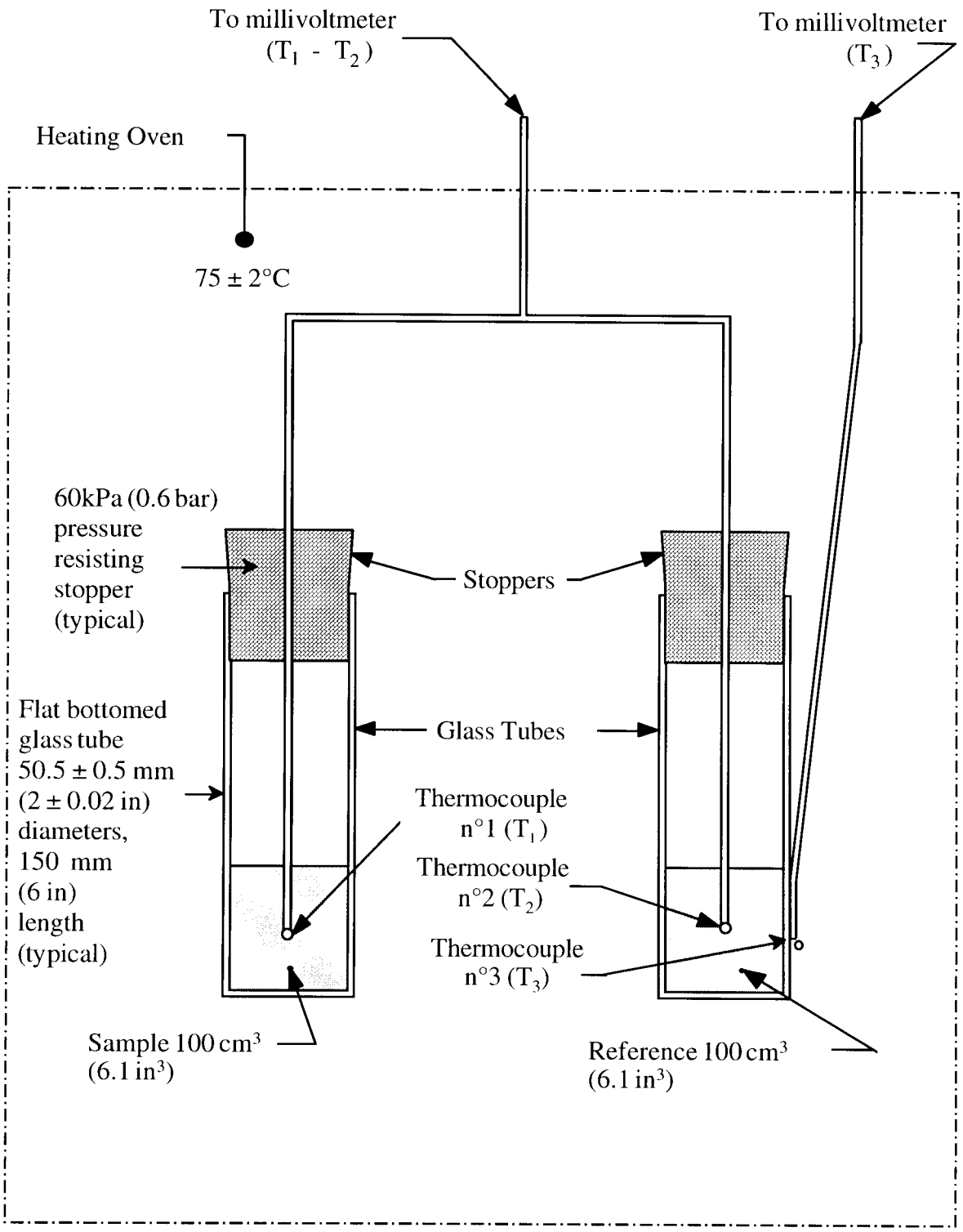

NOT TO SCALE

See Paragraph 5-4.*c*.

Figure 5-13. Termal stability test configuration—UN Test 3(c)

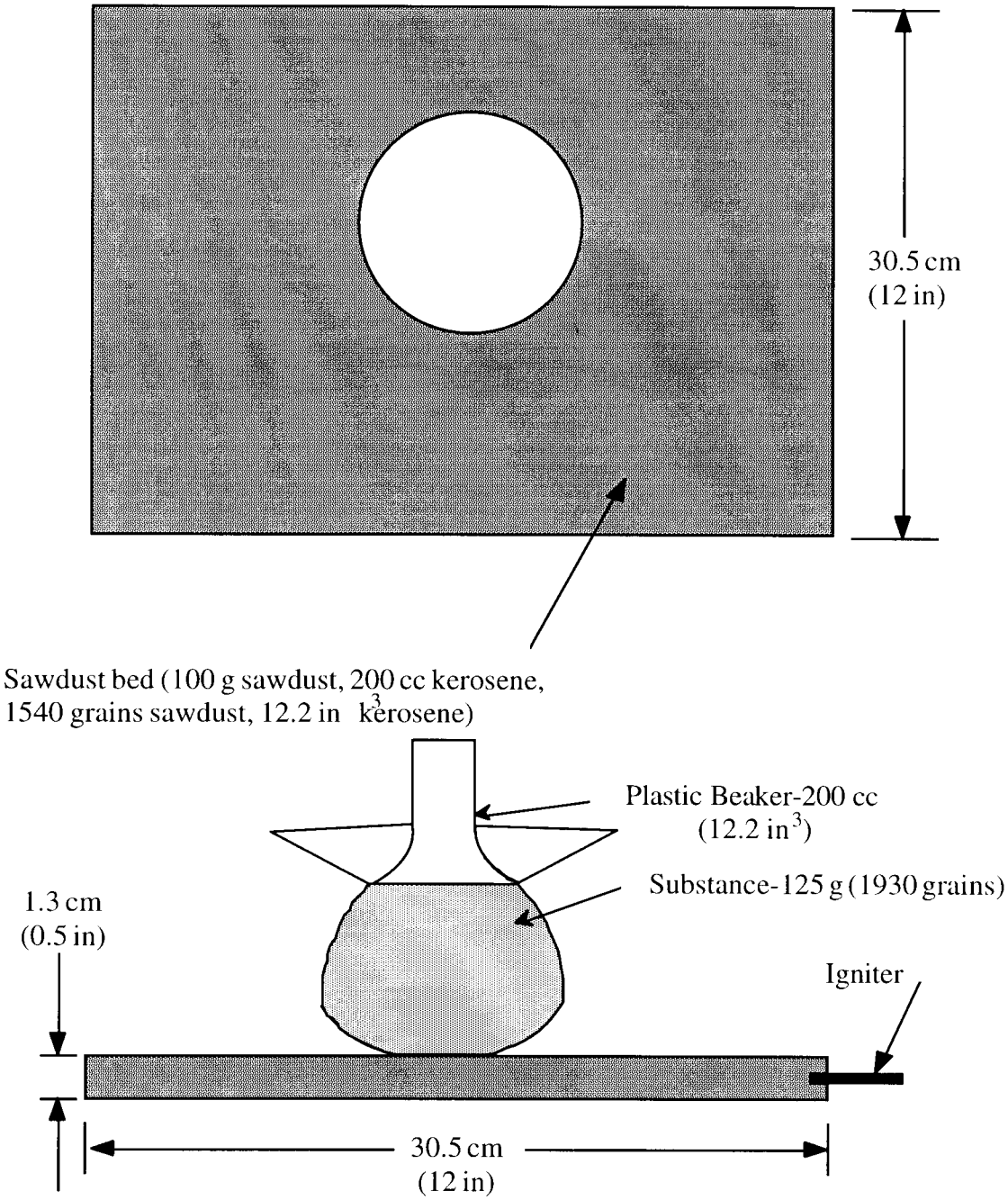

NOT TO SCALE

See Paragraph 5-4.*d*.

Figure 5-14. Small-scale burning test configuration—UN Test 3 (d) (i)

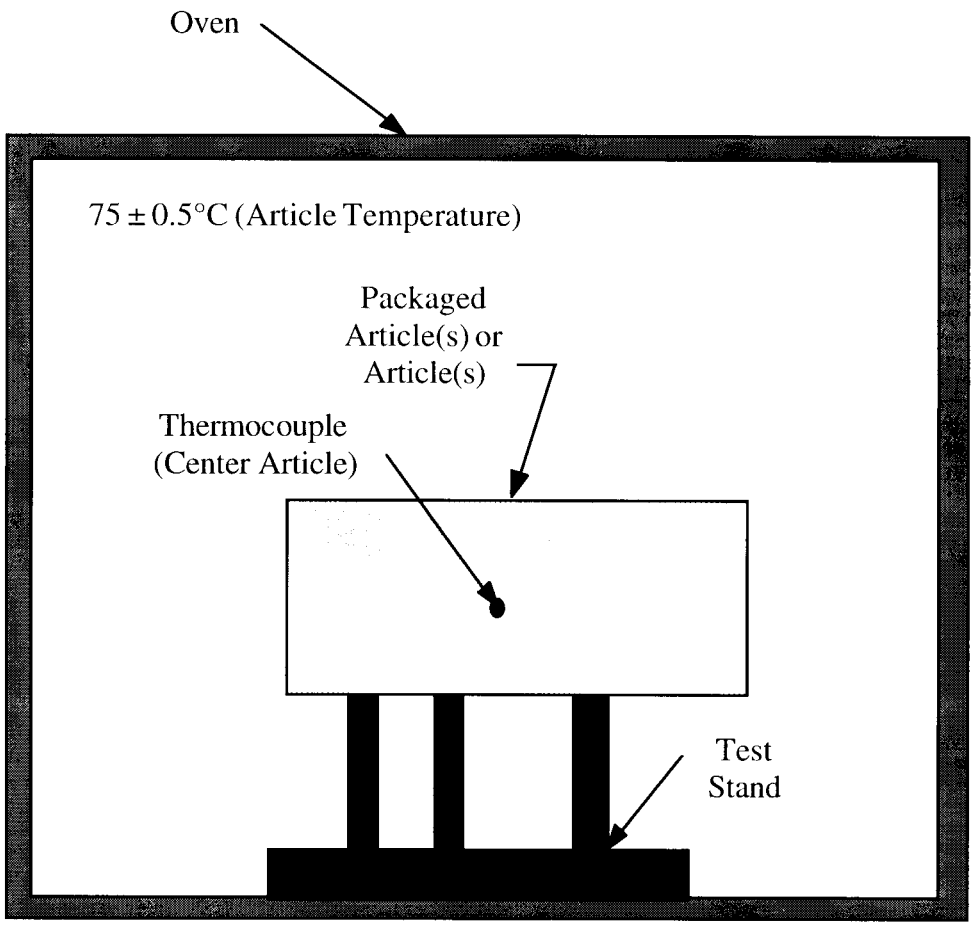

NOT TO SCALE

See Paragraph 5-5.*a*.

Figure 5-15. Termal stability test for articles—UN Test 4(a)

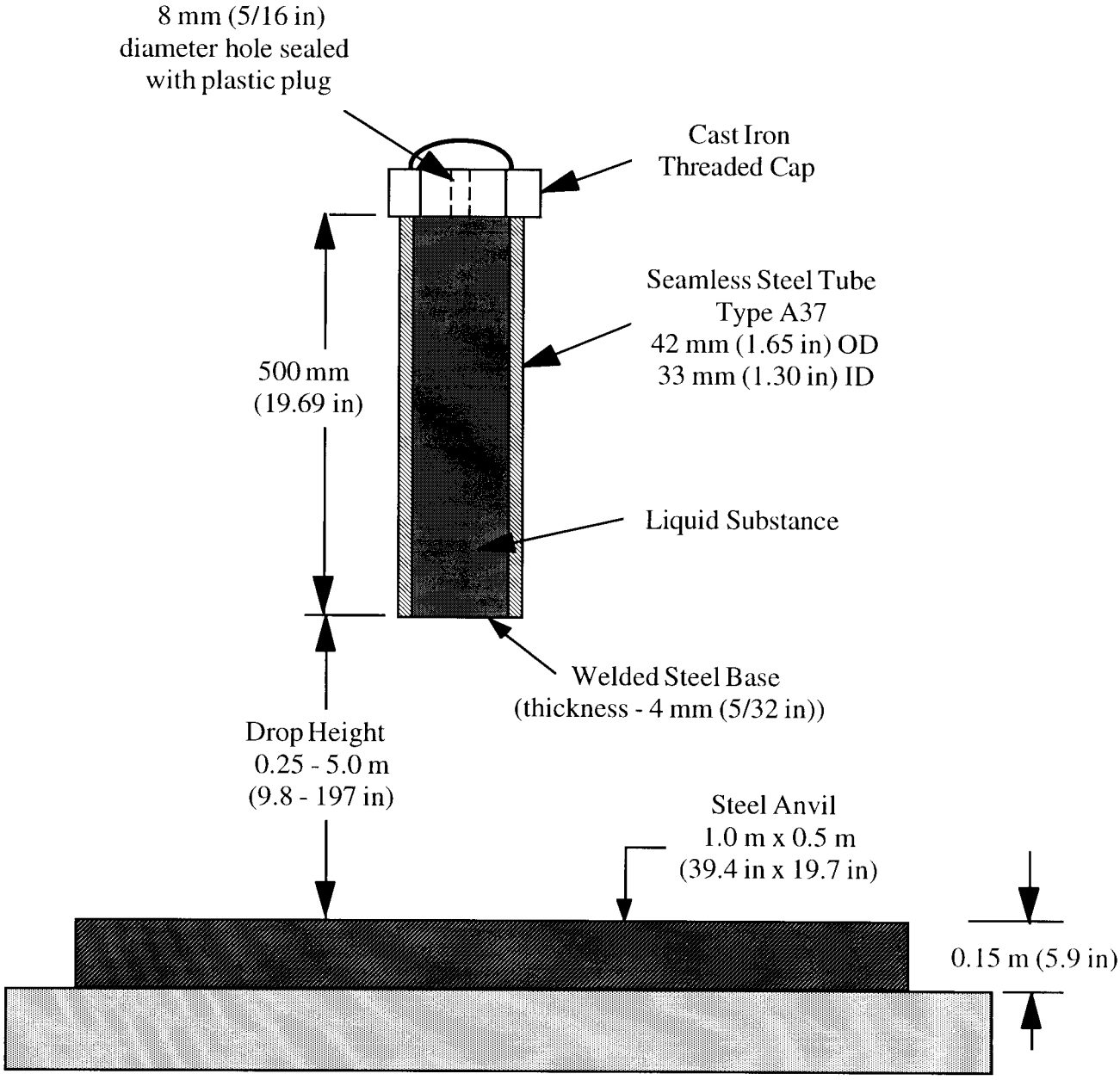

NOT TO SCALE

See Paragraph 5-5.*b*.

Figure 5-16. Steel tube drop test for liquids—UN Test 4(b) (i)

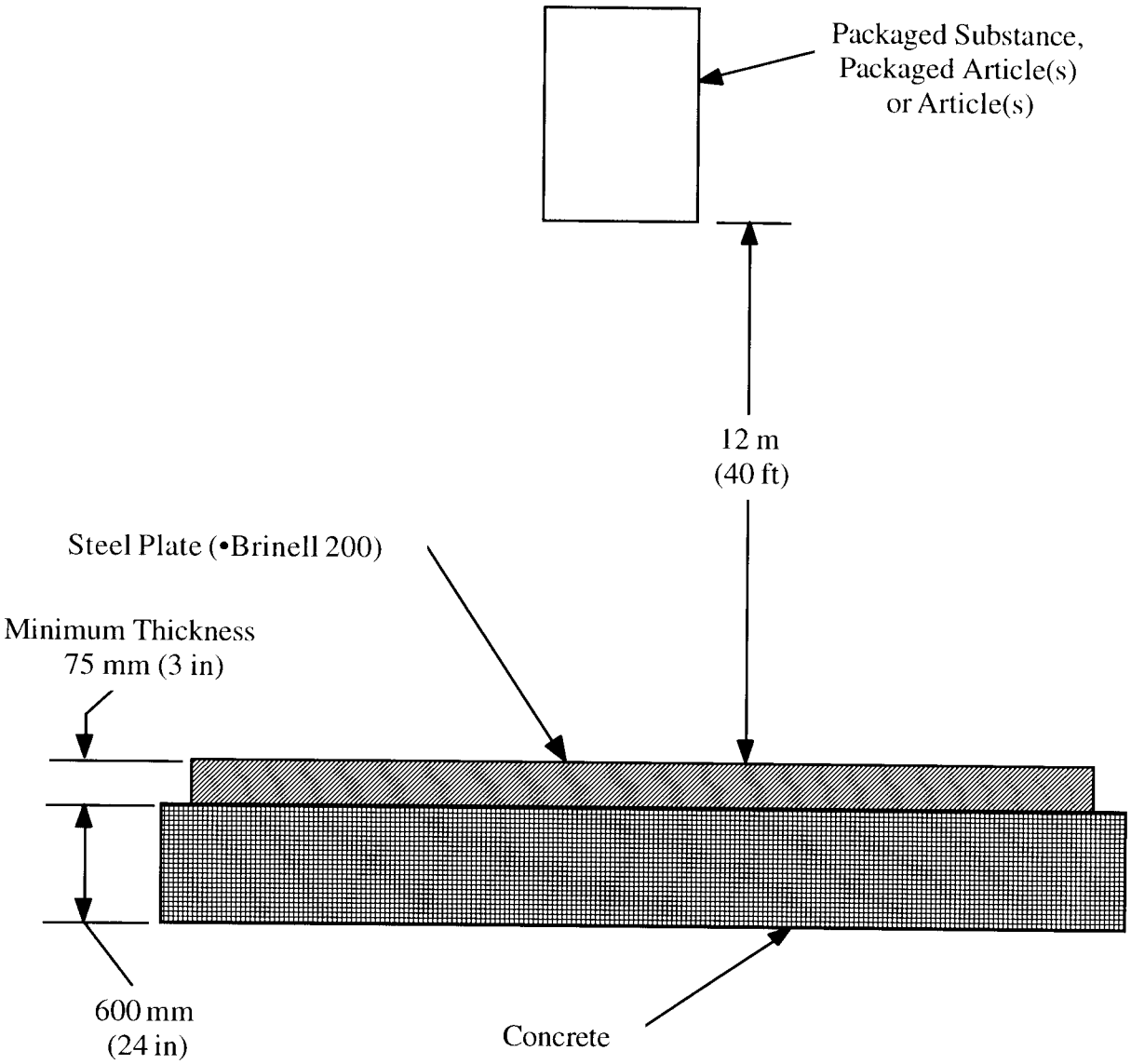

NOT TO SCALE

See Paragraph 5-5.*c*.

Figure 5-17. Twelve meter drop test configuration —UN Test 4(b) (ii)

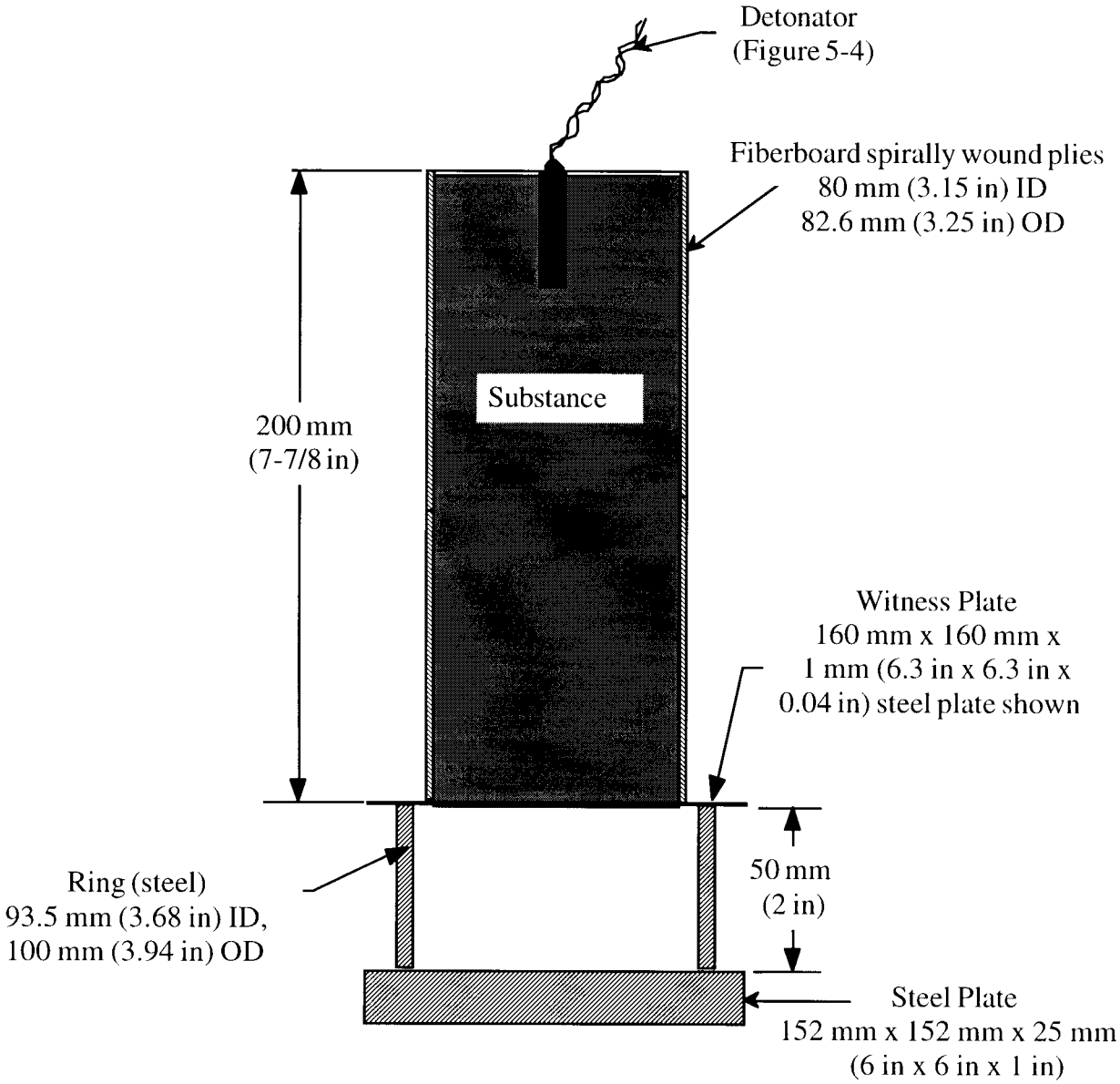

NOT TO SCALE

See Paragraphs 5-6.*a* and 5-8.*a*.

Figure 5-18. Cap sensitivity test configuration—UN Tests 5(a) and 7(a)

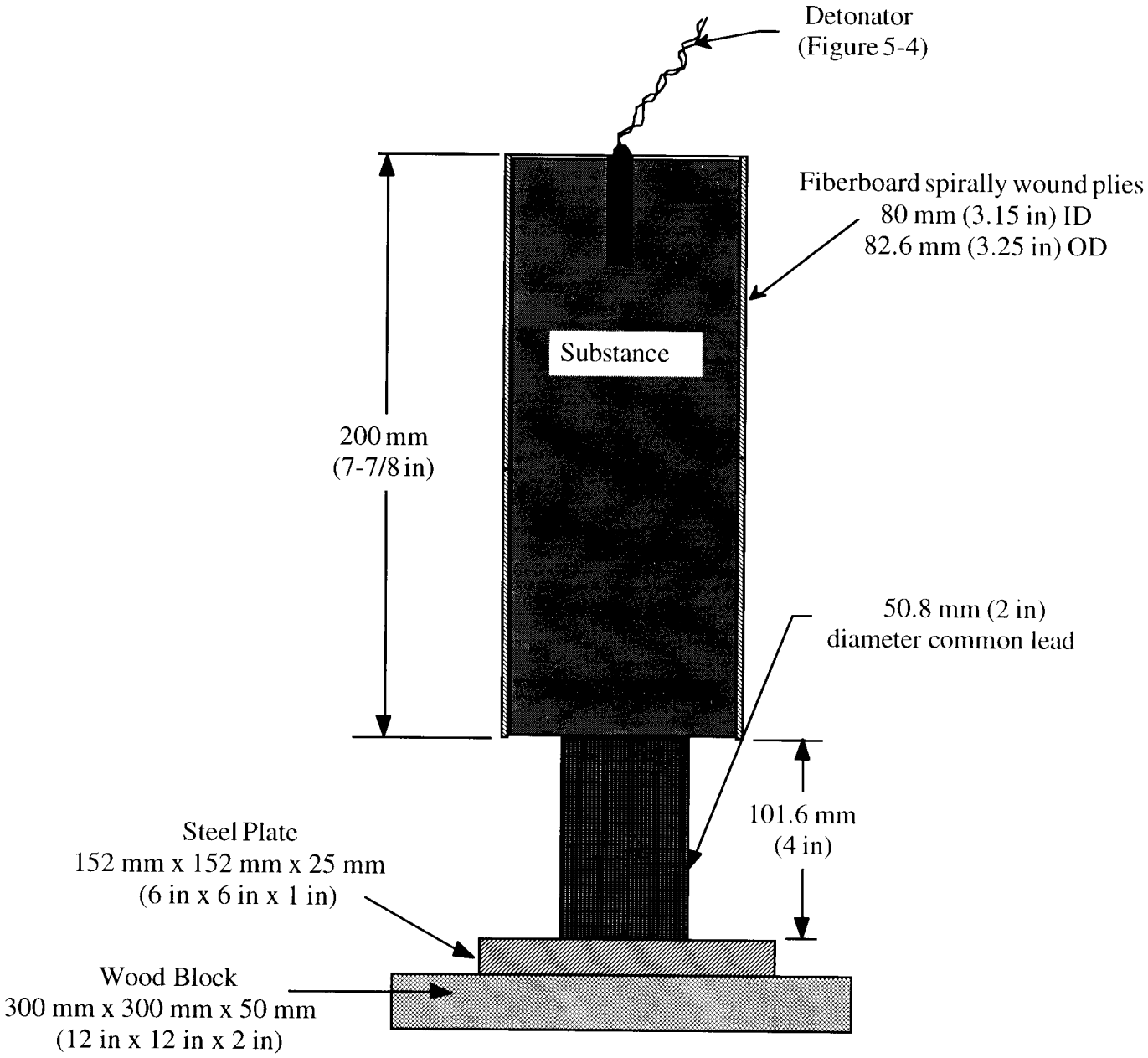

NOT TO SCALE

See Paragraphs 5-6.*a* and 5-8.*a*.

Figure 5-19. Alternate cap sensitivity test configuration—UN Tests 5(a) and 7(a)

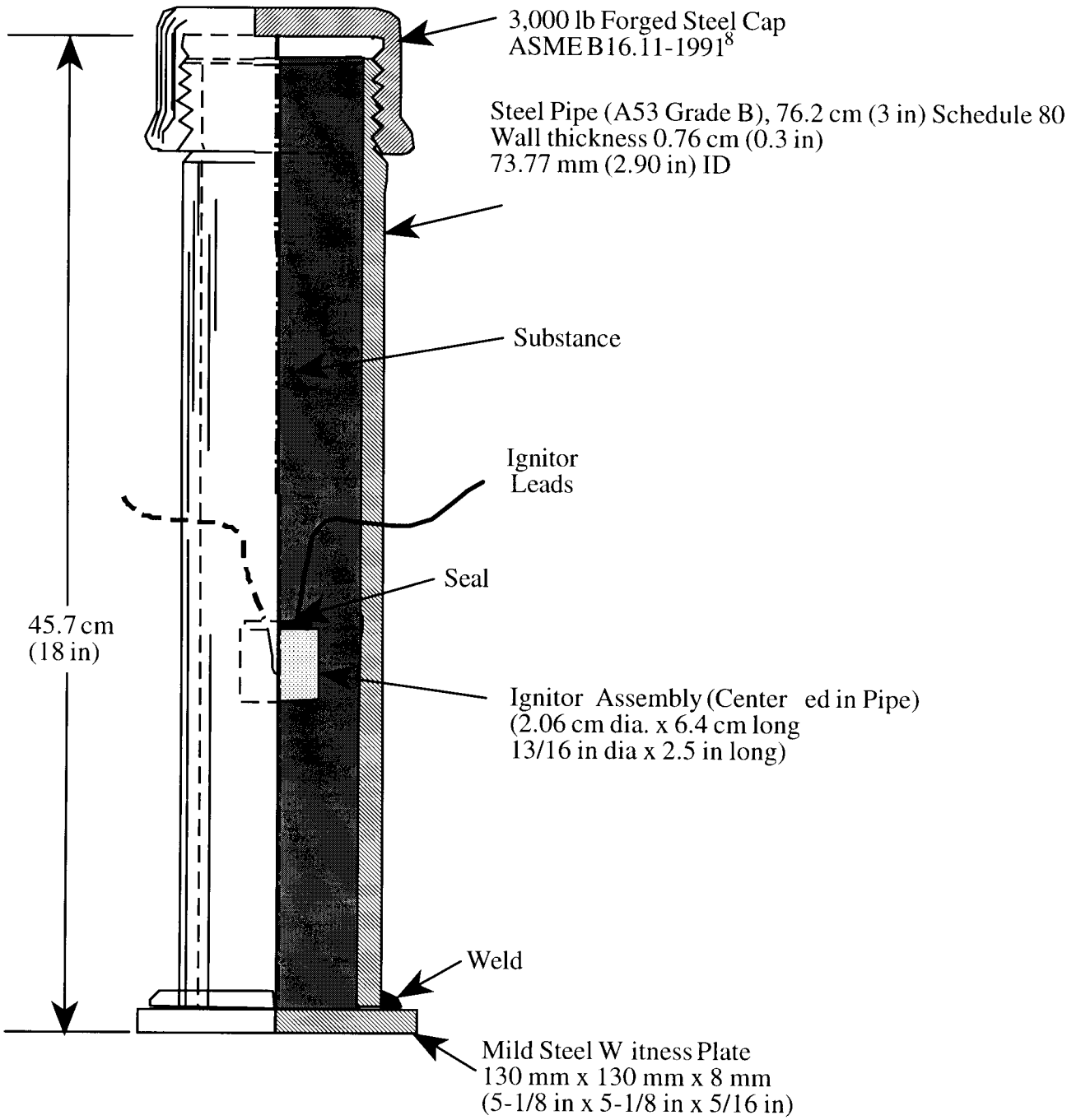

NOT TO SCALE

[8] ASME B16.11-1991, "Forged Fittings, Socket-Welding and Threaded," American Society of Mechanical Engineers, New York, NY (latest version).

See Paragraph 5-6.*b*.

Figure 5-20. Deflagration to detonation test configuration—UN Test 4(b) (ii)

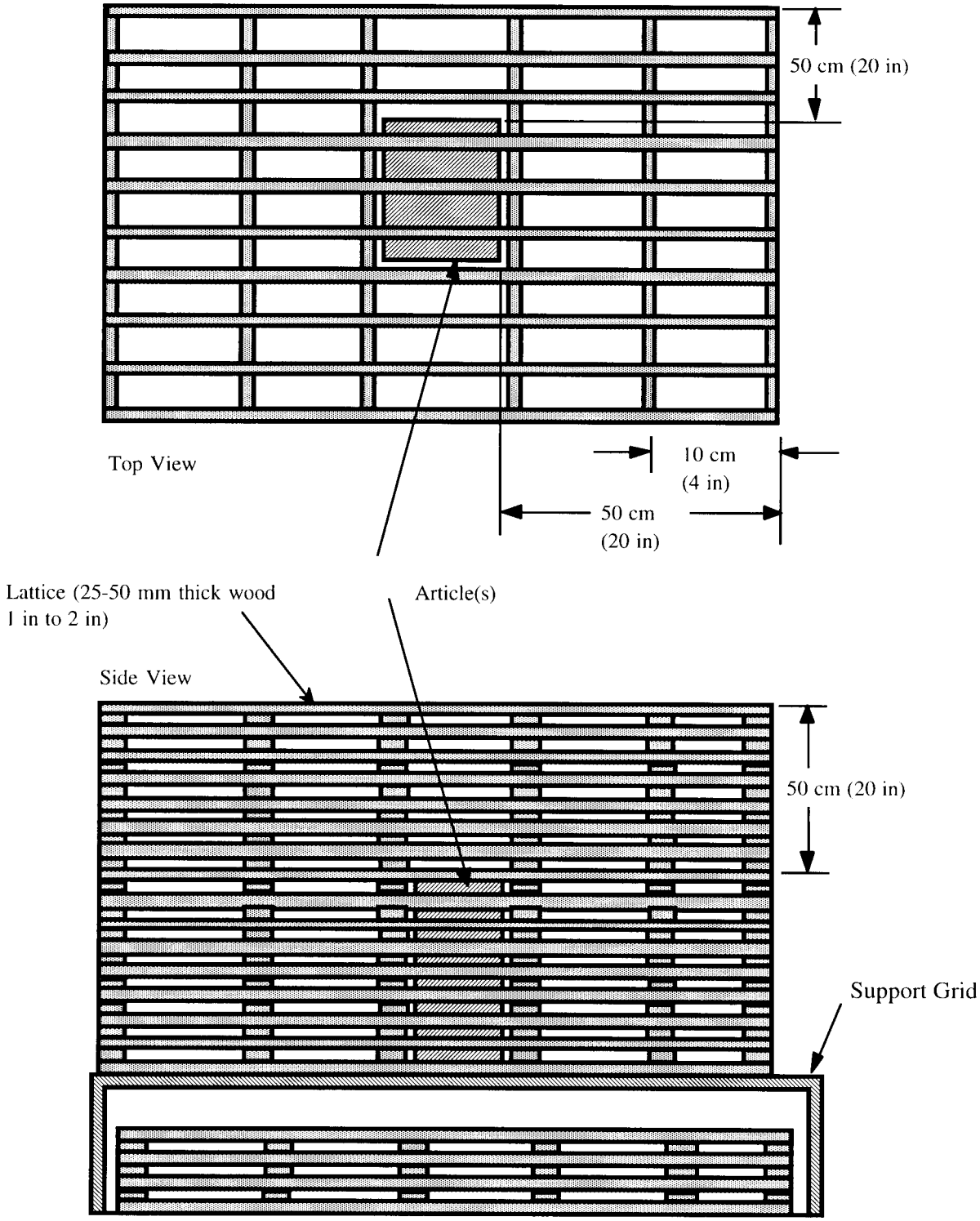

NOT TO SCALE

See Paragraph 5-6.*c*.

Figure 5-21. Typical wood fuel arrangement for external fire test for Hazard Division 1.5—UN Test 5(c)

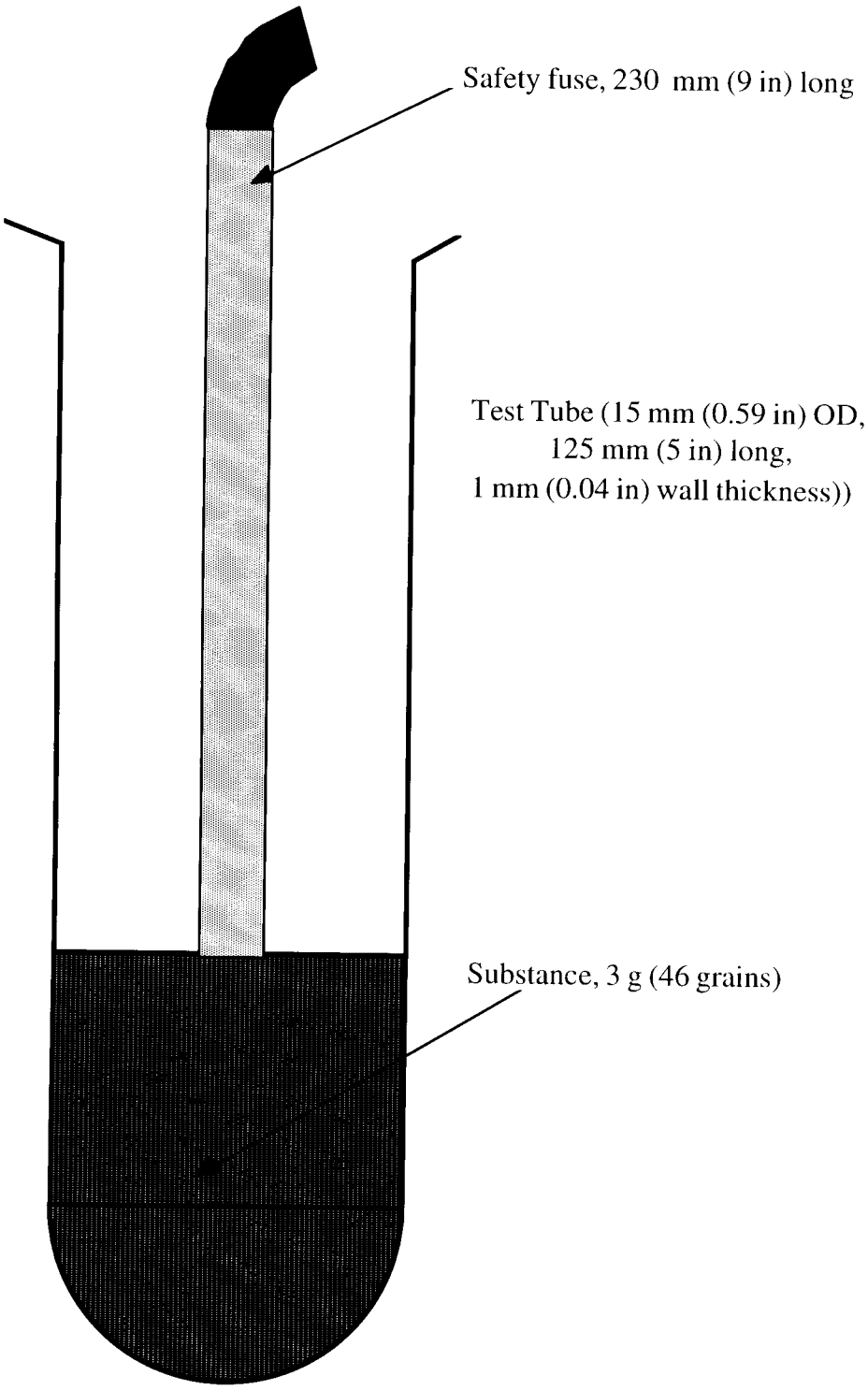

NOT TO SCALE

See Paragraph 5-6.*d*.

Figure 5-22. Prince incendiary spark test arrangement—UN Test 5(d)

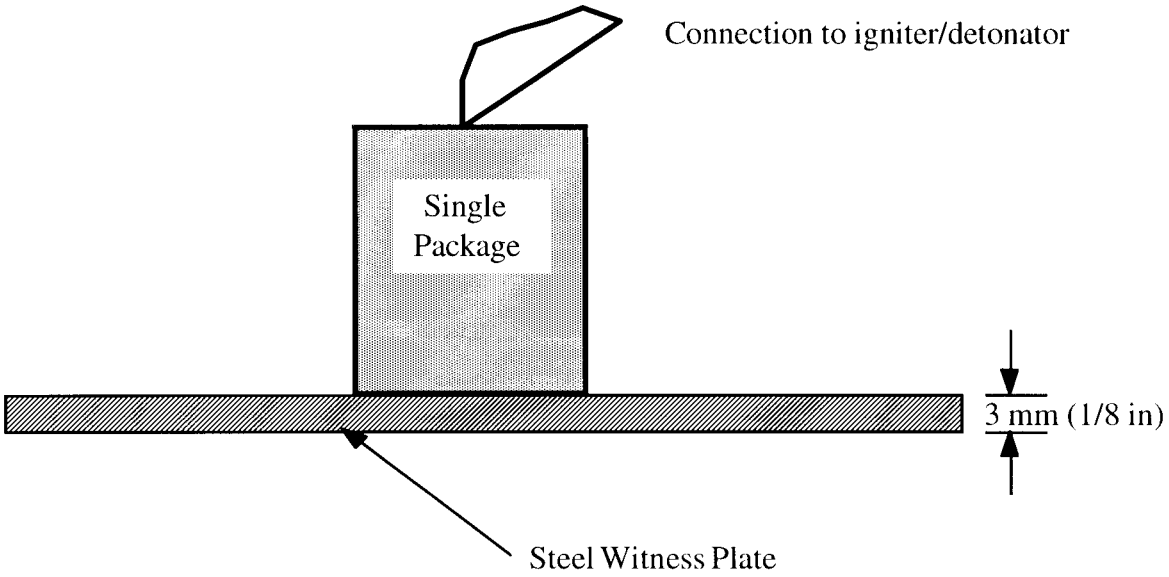

NOT TO SCALE

See Paragraph 5-7.*a*.

Figure 5-23. Single package test arrangement —UN Test 6(a)

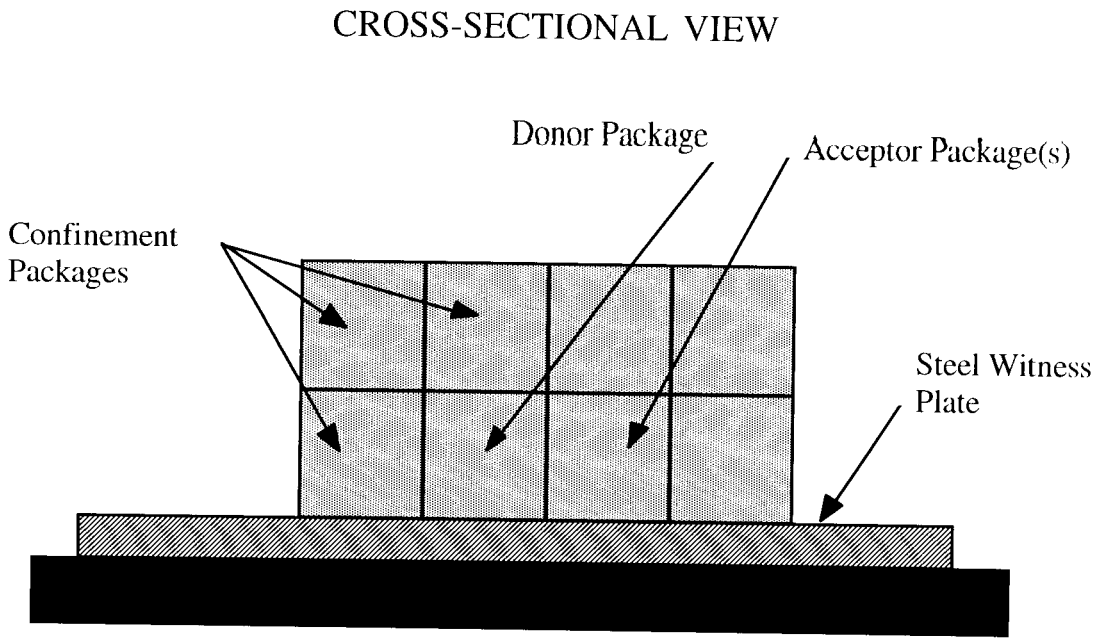

NOT TO SCALE

See Paragraph 5-7.*b*.

Figure 5-24. Typical stack test arrangement—UN Test 6(b)

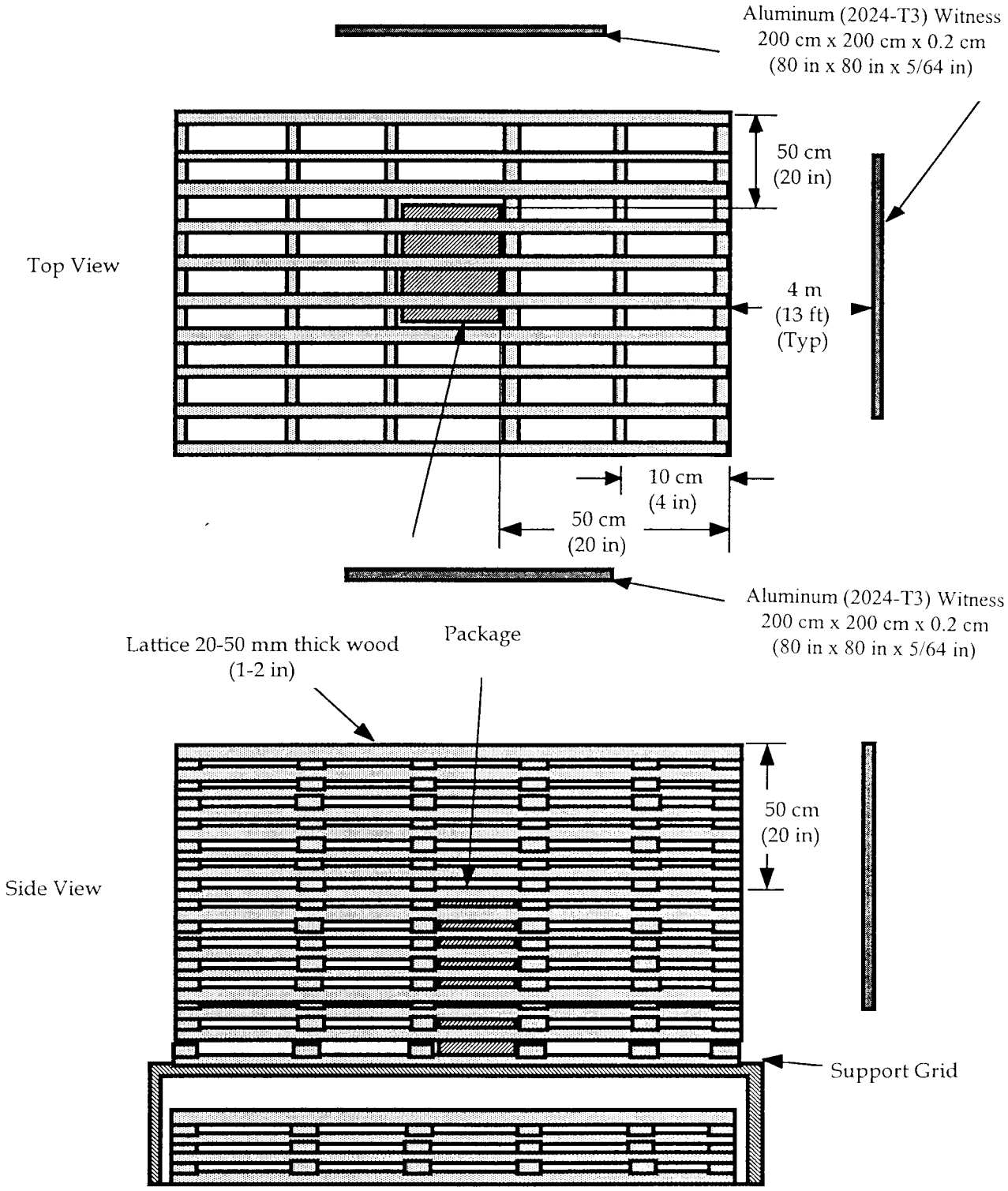

NOT TO SCALE

See Paragraph 5-7.*c*.

Figure 5-25. Typical wood fuel arrangement for external fire (bonfire) test—UN Test 6(c)

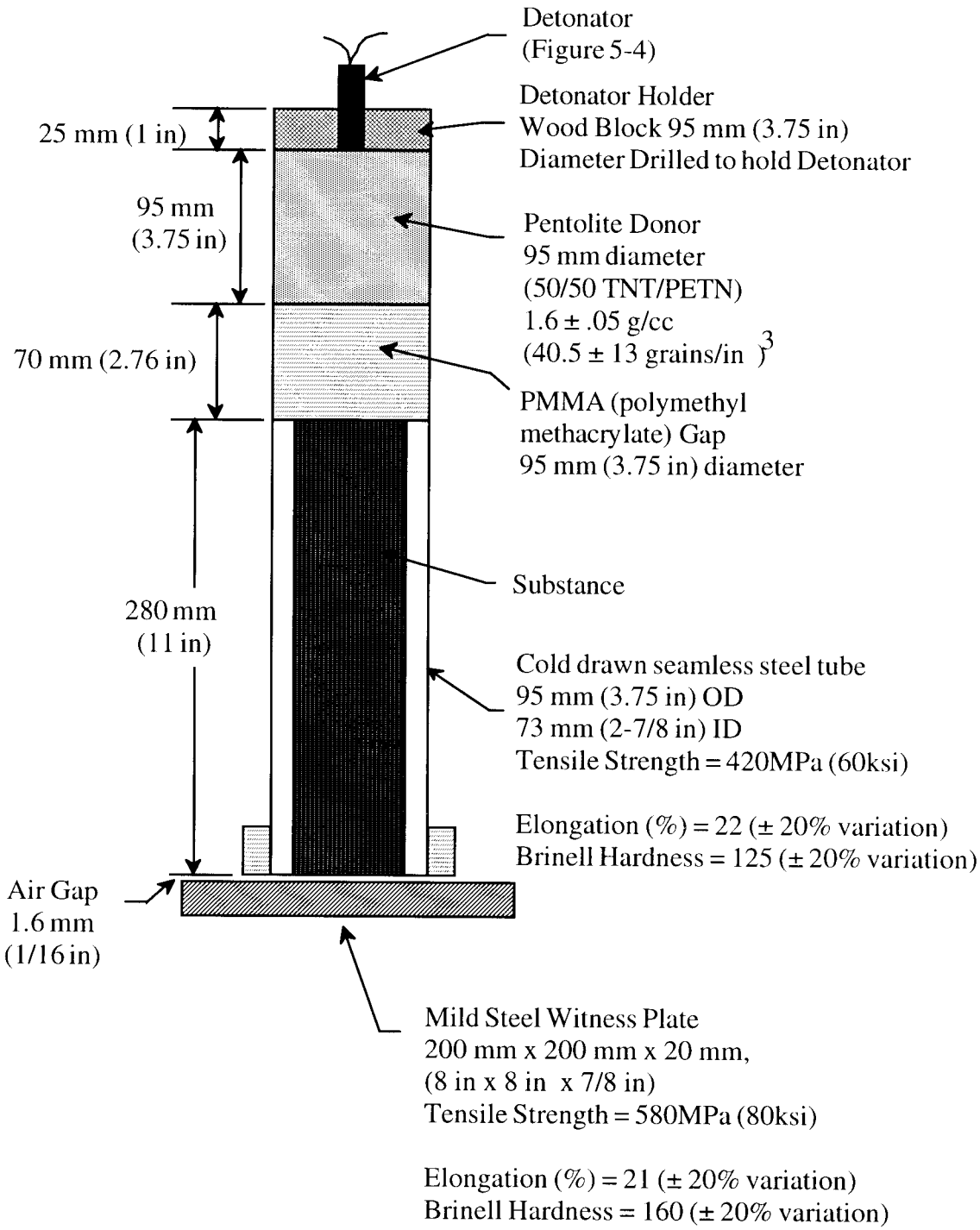

NOT TO SCALE

See Paragraph 5-8.*b*.

Figure 5-26. EIDS gap test configuration—UN Test 7(b)

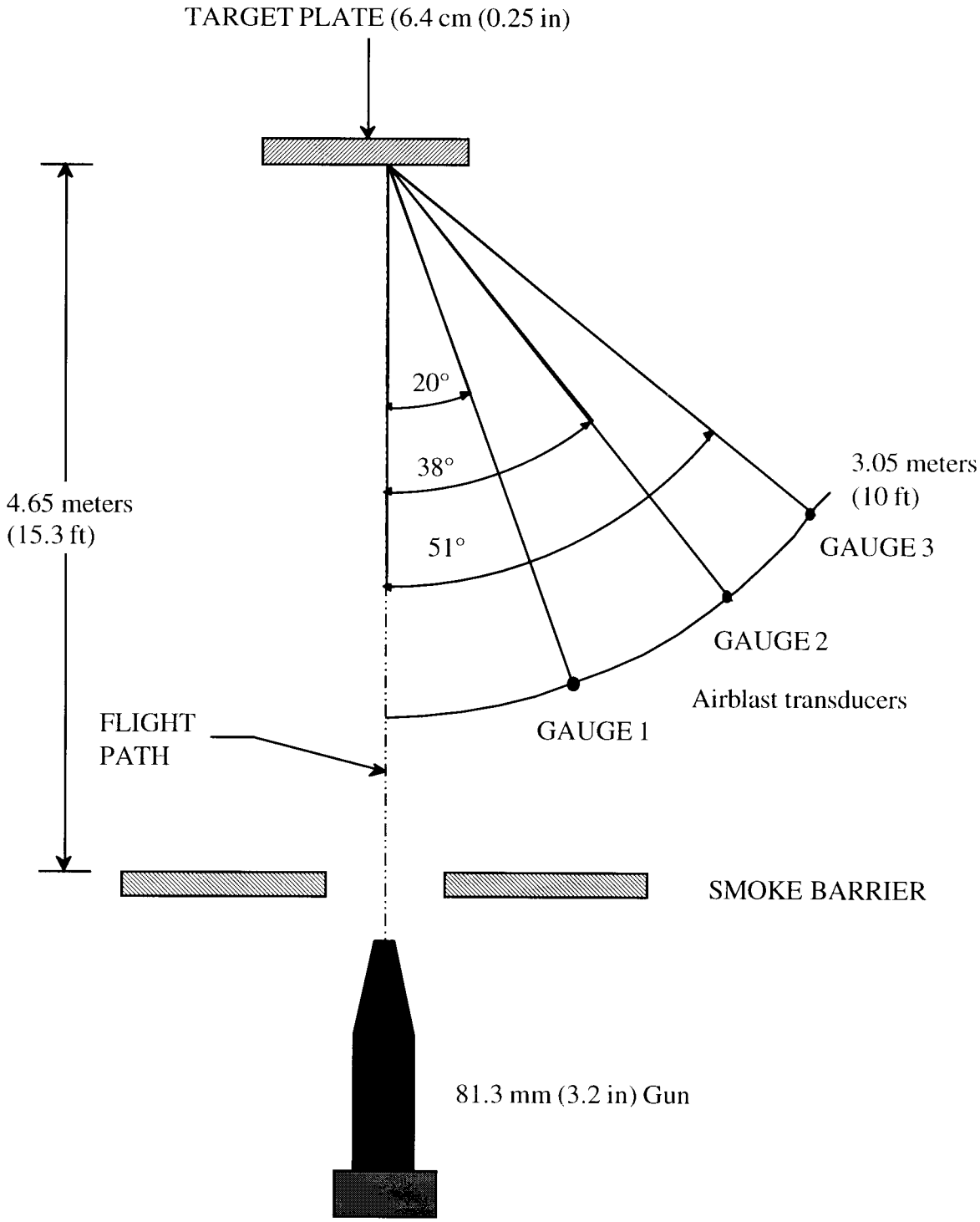

NOT TO SCALE

See Paragraph 5-8.*c*.

Figure 5-27. Susan impact test arrangement—UN Test 7(c) (i)

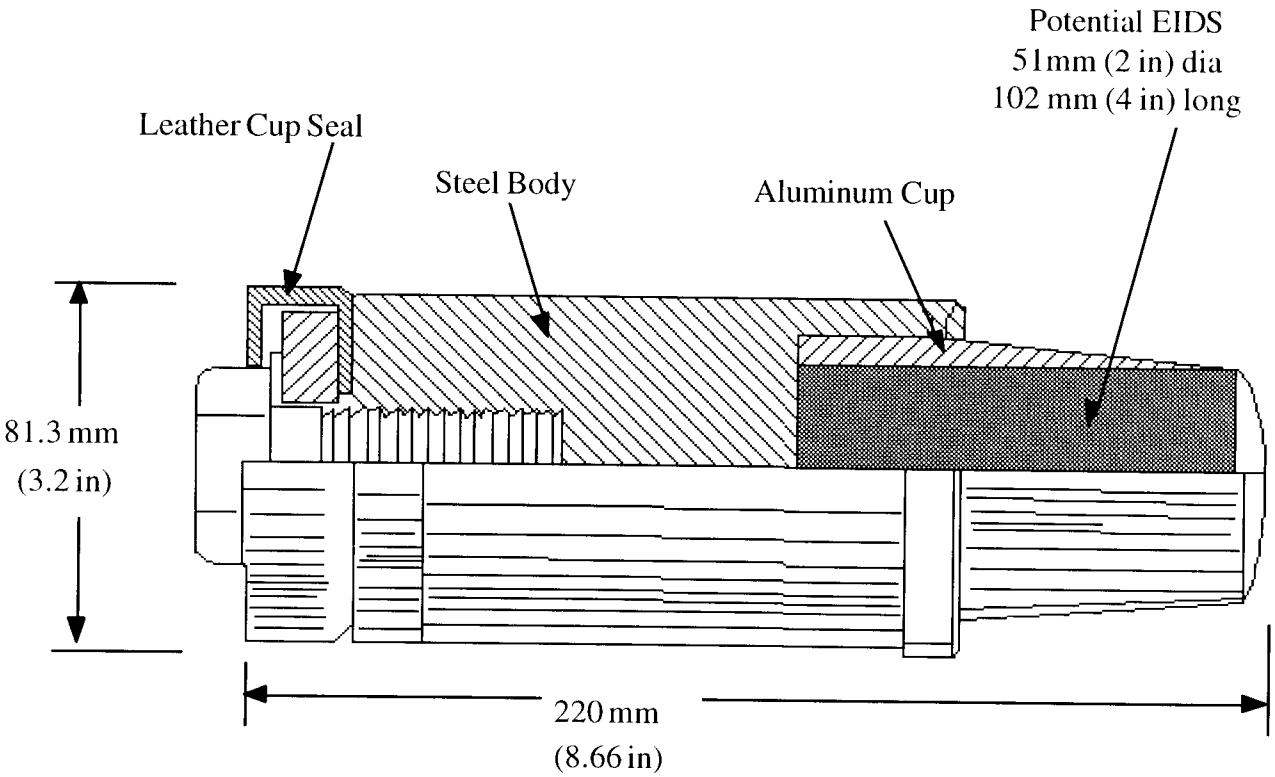

NOT TO SCALE

See Paragraph 5-8.*c*.

Figure 5-28. Susan projectile—UN Test 7(c) (i)

IMPACT DEVICE

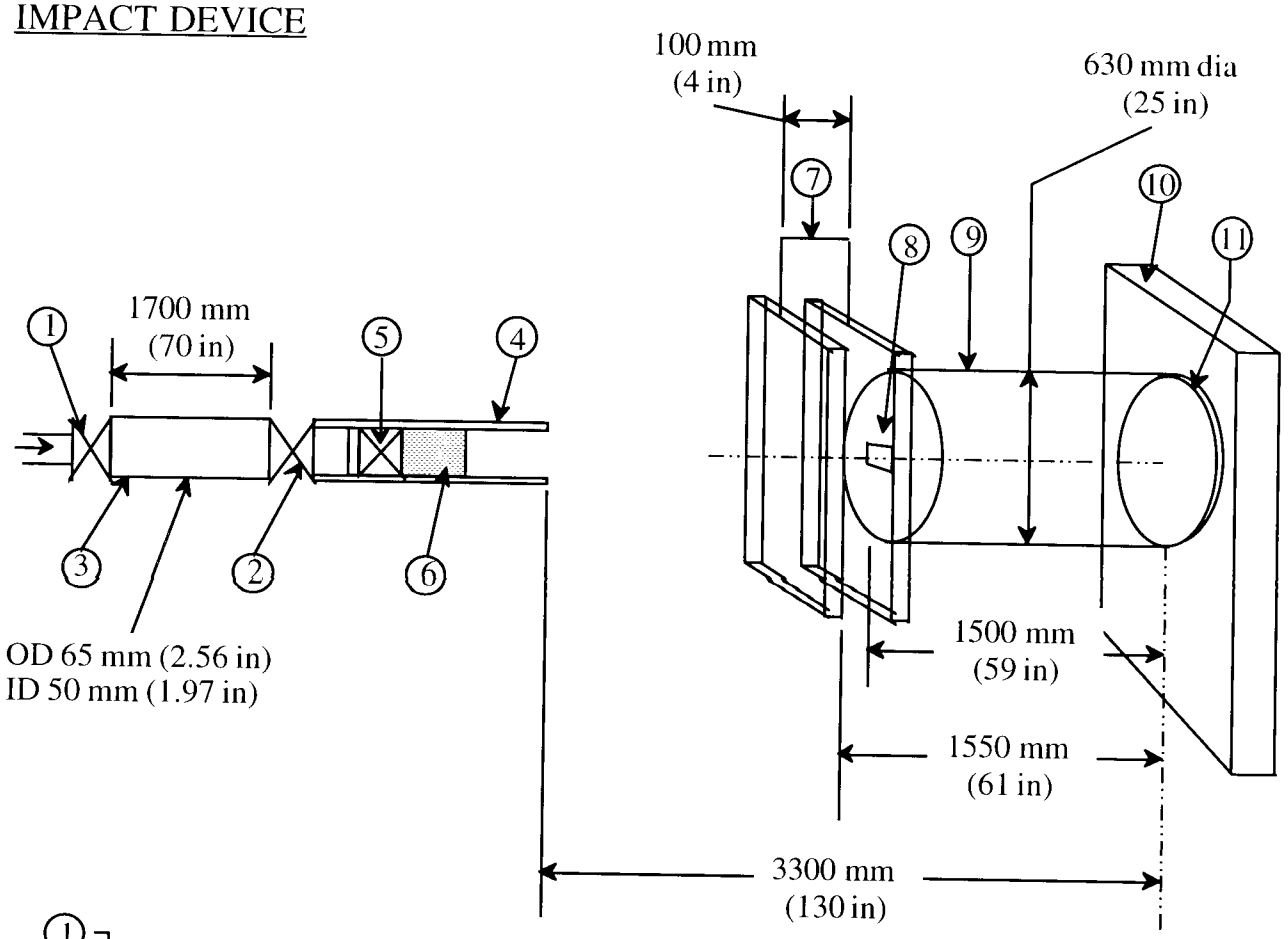

① ② PNEUMATIC VALVES

③ AIR TANK (3.3 liters (201 in ^{3}))

④ LAUNCHER TUBE (Figure 5-29)

⑤ PLASTIC WAD

⑥ SAMPLE (D = 18 ± 0.1 mm (0.71 in ± 0.004 in)) W = 9 ± 0.1 g (140 ± 1.5 grains)

⑦ OPTICAL BARRIERS

⑧ OPENING - 100 X 100 mm (4 in x 4 in)

⑨ PLEXIGLASS BOX (Fragment Recovery)

⑩ CONCRETE WALL

⑪ STEEL IMPACT PLATE 630 mm dia, 20 mm thick (25 in dia, 3/4 in thick)

NOT TO SCALE

See Paragraph 5-8.*d*.

Figure 5-29. Friability test configuration—UN Tests 7(c) (ii) and 7(d) (ii)

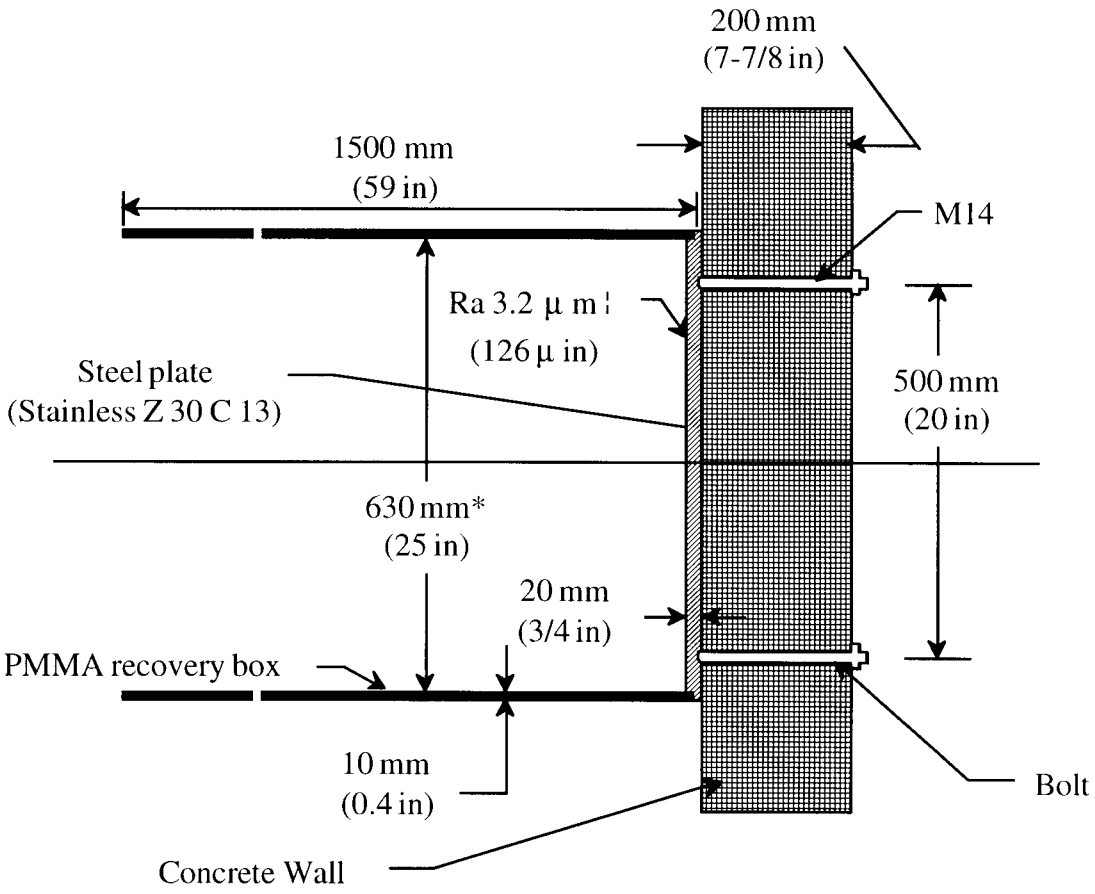

* In case of highly fragmentable sample, use ID = 200 mm (7-7/8 in) to limit the fine dust loss.

NOT TO SCALE

See Paragraph 5-8.*d*.

Figure 5-30. Steel plate and recovery box setup for friability test—UN Tests 7(c) (ii) and 7(d) (ii)

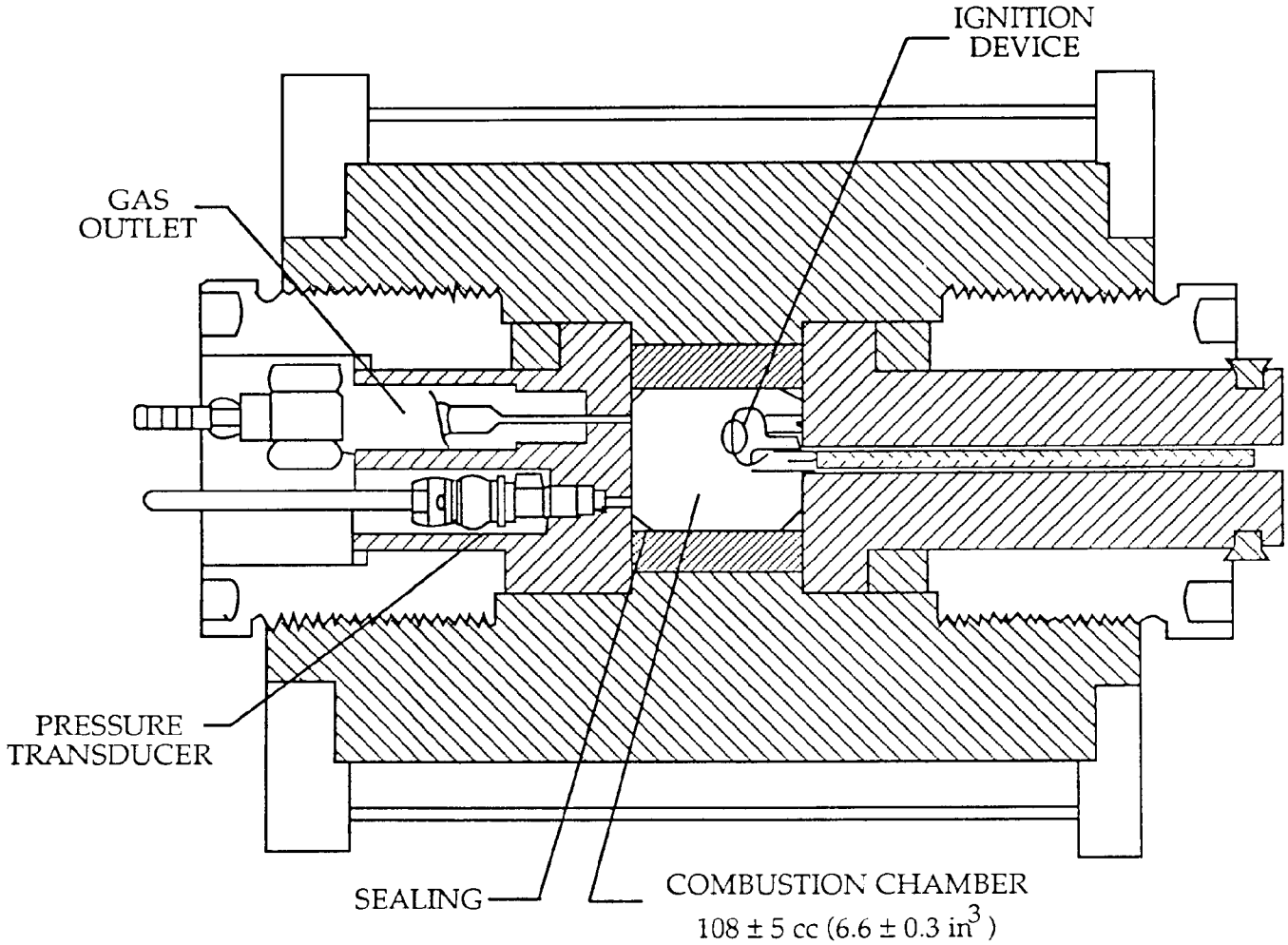

NOTE: Chamber must be able to sustain a pressure of 300 MPa (3 kilobars)

NOT TO SCALE

See Paragraph 5-8.*d*.

Figure 5-31. Closed vessel for friability test–UN Tests 7(c) (ii) and 7(d) (ii)

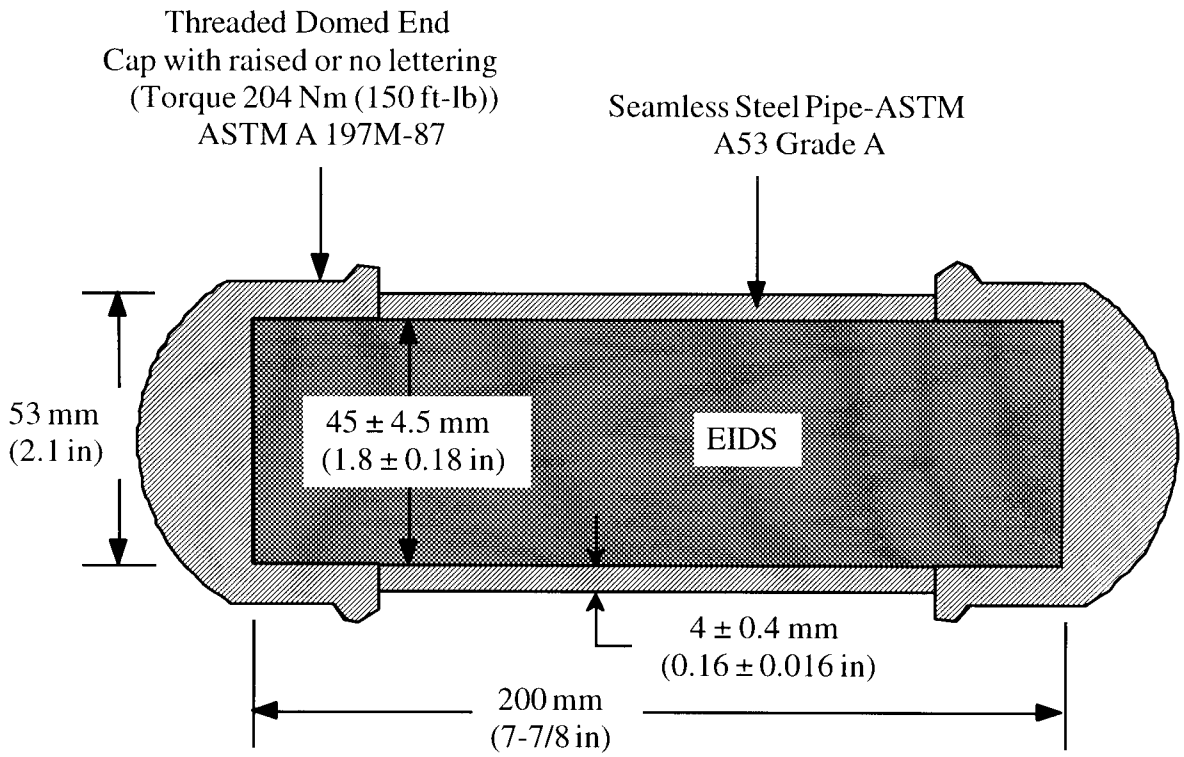

NOT TO SCALE

See Paragraphs 5-8.*e*, 5-8.*f* and 5-8.*g*.

Figure 5-32. Steel pipe used for EIDS bullet impact, EIDS external fire test and EIDS slow cookoff test—UN Tests 7(d) (i), 7(e), and 7(f)

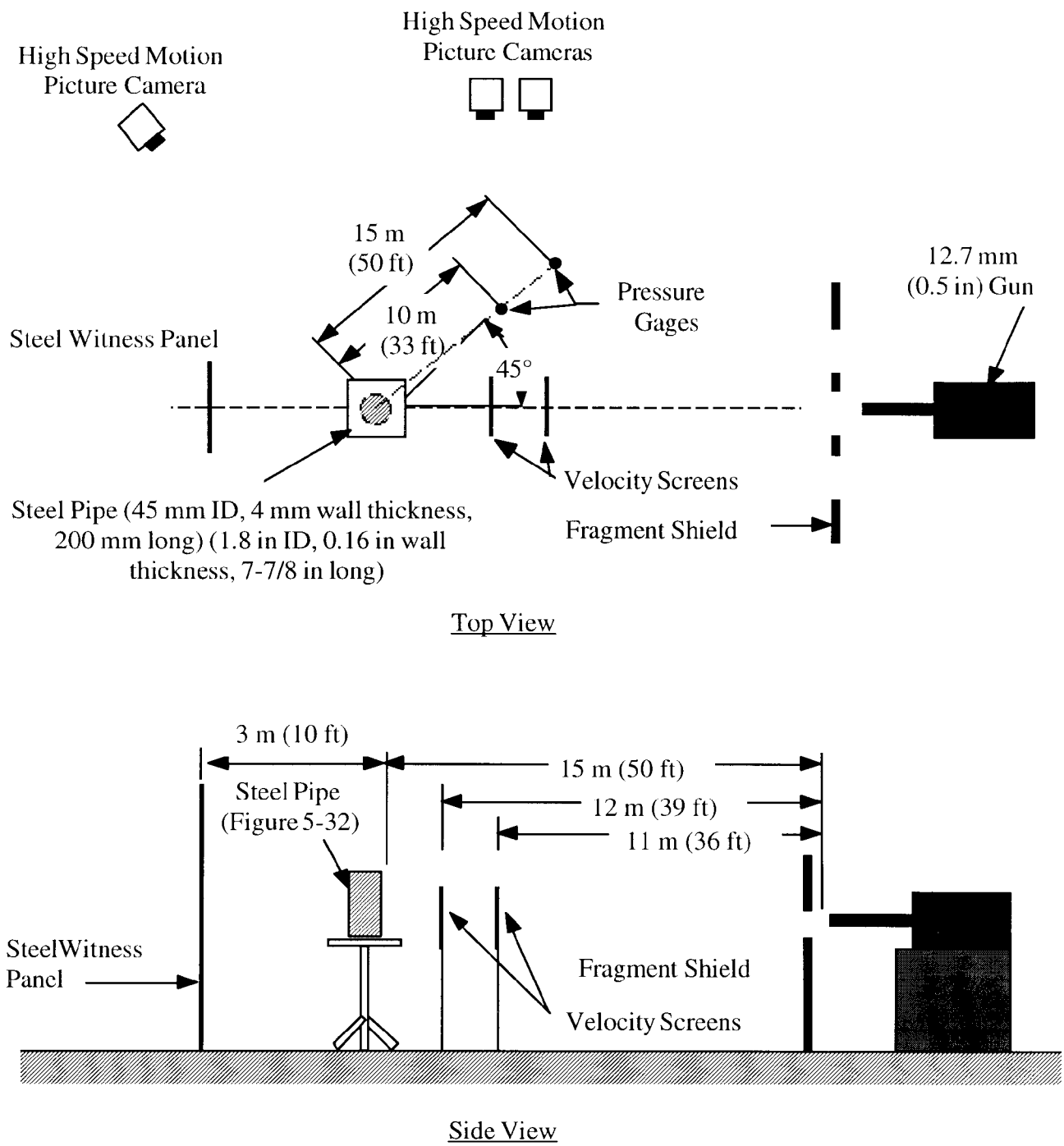

NOT TO SCALE

See Paragraph 5-8.*e*.

Figure 5-33. EIDS bullet impact test arrangement—UN Test 7(d) (i)

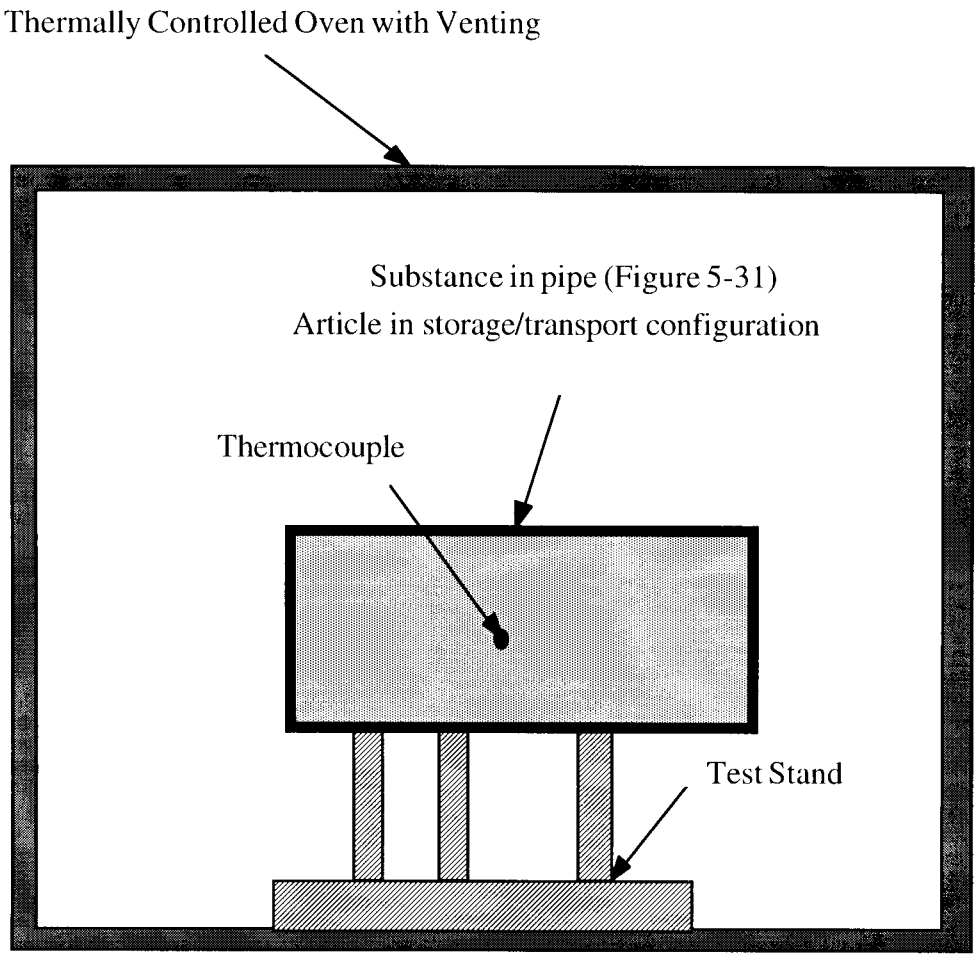

NOT TO SCALE

See Paragraphs 5-8.*g* and 5-8.*j*.

Figure 5-34. EIDS slow cookoff test—UN Test 7(f) and 1.6 article slow cookoff test —UN Test 7(h)

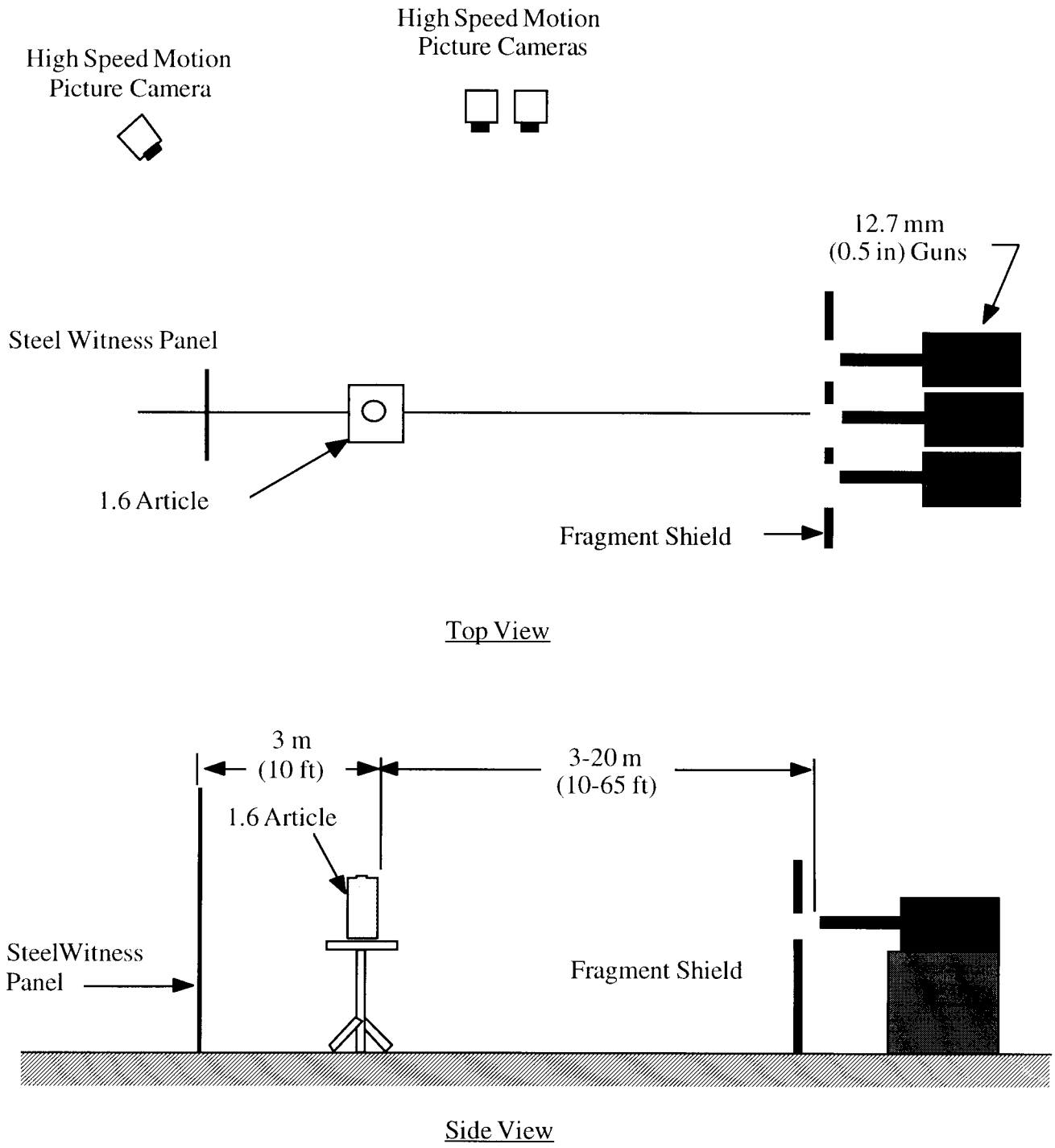

NOT TO SCALE

See Paragraph 5-8.*j*.

Figure 5-35. 1.6 multiple bullet impact test arrangement—UN Test 7(j)

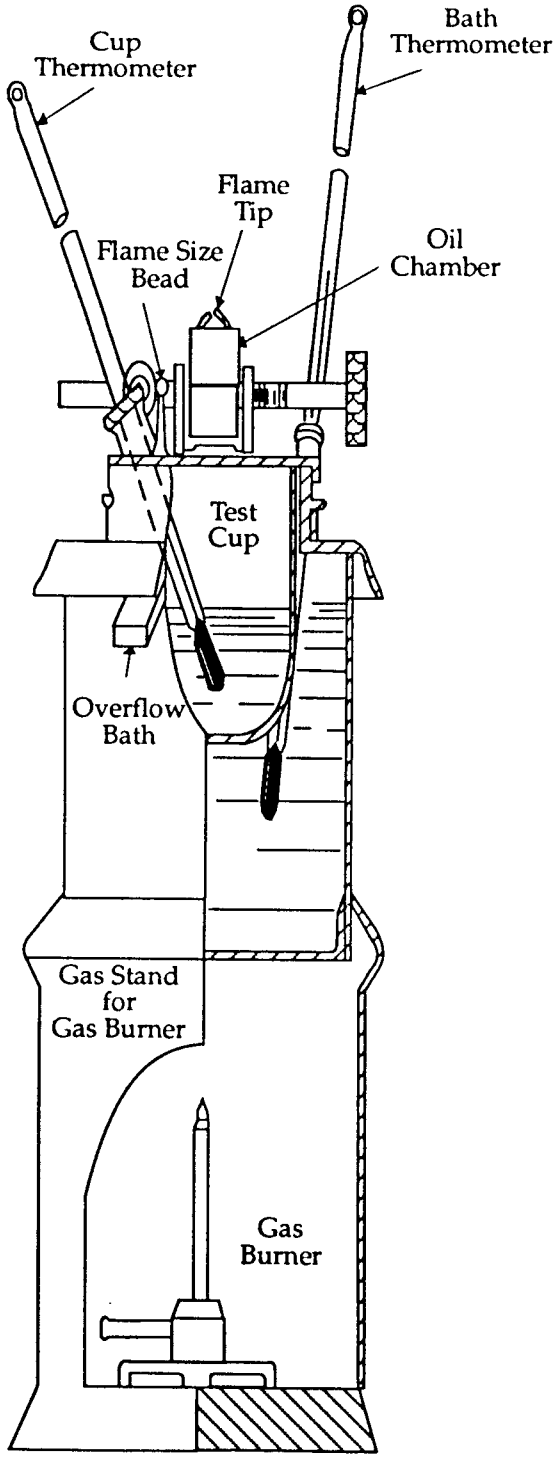

NOT TO SCALE

See Paragraph 5-9.*a*.

Figure 5-36. Tag closed vessel

Chapter 6
Instrumentation, interpretation of results and alternate tests

6–1. Introduction

This chapter specifies minimum requirements for instruments and equipment for measurement of airblast pressure, fragment dispersal, thermal flux, and firebrands associated with tests prescribed in chapter 5, and interpretation of the results in order to assign the proper hazard division. Minimum requirements for data analysis and reporting are also specified. In addition, acceptable alternate test procedures are presented.

a. Blast pressure measurements are to be used for the determination of a net explosive weight for quantity distance (NEWQD) (see paras 4–9*d* and 6–2) of configurations of reactive materials in ammunition as they are packaged and stored, or of ammunition constituents whose contribution to the total energy release in a single event is not known. For example, Hazard Division 1.3 material in assembled ammunition may contribute to the overall explosive yield.

b. Observations of fragment dispersal, areal density (see para 6–3*b*), and individual weights are necessary for the determination of minimum separation distances consistent with established criteria for fragment hazards to personnel.

c. Measurements of the thermal radiation field (thermal flux) and observations of firebrands are used to determine the maximum separation distance for Hazard Divisions 1.3 and 1.4 materials consistent with established criteria for thermal hazards for personnel and fire propagation by firebrands.

d. Alternate test procedures that are acceptable to the DoD Hazard Classifiers are presented at the end of this chapter. These alternate tests for purposes of hazard classification are taken from modified Tri-Service test protocols for qualification and weapons systems safety.

6–2. Blast measurements

a. Blast parameters.

(1) Blast output is to be evaluated with reference to the classical explosive blast waveform illustrated in Figure 6–1. Parameters defining the waveform and indicated in the figure include—

(a) Peak or maximum overpressure that occurs at the instant of pulse arrival in the classical waveform.

(b) Positive phase duration, or the interval between shock arrival and the time, at which the overpressure returns to zero.

(c) Positive phase impulse defined as the integral of the overpressure from the time of shock arrival to the end of the positive phase.

(2) The pressure and impulse are used to compute values of NEWQD to represent the amount of material under consideration.

b. Data acquisition system. A system for measuring and recording blast overpressure as a function of time consists of a transducer, signal conditioning equipment appropriate to the transducer type, and recording and reproduction devices. The transducer may be any one of a variety of electromechanical or electronic types having a frequency response adequate to resolve the blast pressure pulse. For purposes of NEWQD determination, for items whose net explosive weights are below 1000 kg, the basic data acquisition system should have a system frequency response of at least 0.01 Hz-20 kHz (see App A, Ref 10).

c. Transducer deployment and calibration. For any test that is expected to produce an overpressure pulse, pressure transducers will be positioned so as to detect the free-field overpressure at distances where it is expected to attain the levels 70, 35, 7, and 3.5 kPa (10, 5, 1, 0.5 psi) based on a pre-test estimate of the yield. Two lines of transducers will be employed. These will be positioned at least 90° apart. If the test item has a line of symmetry, one line of transducers should be placed along this line.

(1) The gauges will be mounted flush with the ground surface or, alternatively, in above-ground fixtures designed to minimize obstruction of the flow, with the sensing face of each gauge parallel to the direction of flow.

(2) The gauges will have been calibrated prior to the tests, and the testing activity is responsible for continually maintaining up-to-date dynamic calibration data for gauges, utilizing laboratory procedures appropriate to the transducer type.

(3) An electronic calibration pulse of amplitude simulating that of the anticipated peak pressure will be recorded immediately before each test.

d. Data analysis. Pressure-time records will be analyzed to determine peak pressures and positive phase impulses.

(1) The barometric pressure, ambient air temperature, and wind velocity and direction at the time of the test will be recorded and reported. These values will be used to convert the measured distances, times, pressures, and impulses to Standard or Sea Level Conditions (atmospheric pressure of 101.36 kPa (14.7 psi), atmospheric temperature of 288.16° K (15°C).

(2) The following equations will be used to make the conversion:

(a) $P_{SL} = P_{TS} \times F_P$

(b) $R_{SL} = R_{TS} \times F_R$

(c) $T_{SL} = T_{TS} \times F_T$

(d) $I_{SL} = I_{TS} \times F_I$

where P is pressure, R is distance, T is time, I is impulse; the subscript SL and TS refer to sea level or standard conditions and to measurements made at the test site, respectively.

(3) The four factors F_P, F_R, F_T, and $F_I$are defined as follows:

(a) $F_P = (P_{SL}/P_{TS})$

(b) $F_R = (P_{TS}/P_{SL})^{1/3}$

(c) $F_T = (P_{TS}/P_{SL})^{1/3} \times (T_{SL}/T_{TS})^{1/2}$

(d) $F_I = (P_{SL}/P_{TS})^{2/3} \times (T_{SL}/T_{TS})^{1/2}$

where P is barometric pressure and T is absolute atmospheric temperature. As defined above $P_{SL}$is 101.36 kPa (14.7 psi) and $T_{SL}$is 288.16° K (15°C).

(4) Two sets of blast measurements should be reported—those taken at the test site and the test site measurements converted to standard conditions.

e. Data interpretation. Any observed anomalies in the recorded data that cannot be attributed simply to instrument malfunction will be noted. In the event that a systematic, substantial difference of the waveform from the classical shape in Figure 6–1 is observed, such as the absence of an initial peak, the peak pressure calculations for NEWQD described below may be dispensed with in favor of a presentation of the records themselves together with an analysis. If no anomalies are observed, the pressure-distance and impulse-distance data which have been converted to standard conditions will be analyzed to determine NEWQD (this procedure is described below). These values of NEWQD will be reported. Reports of tests of complete rounds of ammunition which result in the assignment to Hazard Division 1.1 will include data on equivalence of included Hazard Division 1.3 components such as propelling charges.

f. Effective explosive weight (EEW). The EEW of a particular explosive, device, event, stack, etc., is the weight of TNT (hemispherical TNT surface burst, Fig 6–2) required to produce a selected shockwave parameter of equal magnitude to that produced by a unit weight of the material under test. A given material will have several EEW's depending on the shockwave parameter selected.

(1) Expressed as a ratio of the weight of the material under test to that of TNT in Figure 6–2, the EEW of an explosive more powerful than TNT is greater than unity; the EEW of one less powerful is less than unity. Under this definition, the values of EEW determined respectively on the basis of the pressure and the impulse measured at a given location may differ, and both will be functions of distance, geometry, or donor configuration.

(2) Hence, the general concept of EEW has significance only if the observed waveform is generally similar to the classical form shown in Figure 6–1 and if the geometry of the test material is similar to that of the TNT standard in Figure 6–2. For strictly hazard classification purposes, the EEW of a material is the weight of a bare TNT hemisphere on flat ground (App A, Ref 11) that produces the same free-field overpressure or impulse at a given distance from the test article.

(3) Peak overpressure and scaled positive phase impulse (impulse (I) divided by the cube root of charge weight (W)) for a bare TNT hemisphere are given in Figure 6–2 as a function of the scaled

range—the actual distance (R) from the charge center, divided by the cube root of charge weight (W). Table 6–1 presents the equations which were used to generate these curves. NOTE: These equations are simplifications of those appearing in the Kingery and Bulmash reference (App A, Ref 11). They are accurate to within 0.2% of the full Kingery equations.

(4) EEW based on peak pressure is defined as follows:

$$EEW\ (pressure) = (R_{article}/R_{standard})^3\ p = constant$$

that is, for each pressure level of interest, the EEW (pressure) is the cube of the ratio of the distances (article and standard) at which that pressure occurs.

(5) EEW based on impulse is defined as follows: Since both impulse and distance are scaled according to the cube root of the explosive weight, finding the point on the standard impulse-distance curve corresponding to a measured value from the test data means finding the intersection of a line of slope one (on a log-log plot) passing through the test data and intersecting the standard curve. Either the cube of the ratio of the impulse for the intersection point with that for the standard curve or the cube of the ratio of the ground ranges provides the EEW (impulse) at that point.

$$EEW\ (impulse) = (I_{article}/I_{standard})^3 \text{ or } (R_{article}/R_{standard})^3$$

Note. Ratios taken along a line with slope of one on a log-log plot.

(6) As described above, both EEW's are functions of scaled range. The EEW's should be reported in both graphical and tabular form as a function of the scaled range. In addition, an average EEW based on each parameter should also be reported.

(7) The $(EEW)_{MAX}$ is the higher of the EEW's determined for peak overpressure and positive phase impulse, each averaged over the range 70–3.5 kPa (10–0.5 psi) for the geometry of the donor munition.

(8) The NEWQD is the $(EEW)_{MAX}$ (see para 6–2*f*(7) above) for the ammunition (including Hazard Division 1.1 and Hazard Division 1.3 contributions) minus the $(EEW)_{MAX}$ for only the Hazard Division 1.1 component of the ammunition, and then added to the HEW (see para 4–9*a*) for the ammunition.

(9) Sometimes, based on physical evidence, it is possible to reach the conclusion that division 1.3 material did not contribute to the detonation reaction of division 1.1 material in an ammunition item. For example, a high explosive warhead detonation might project the rocket motor a short distance away where the propellant grain subsequently burns out. If the rocket motor case is substantially intact, showing no evidence of an internal detonation-type reaction, the NEWQD may be set equal to the high explosive weight (HEW) of the warhead. Similarly, recovery of all or a substantial portion of an unreacted rocket motor grain or propelling charge may establish non-contribution. For this reason, it may be prudent to conduct testing of an all-up-round or cartridge before testing the high explosive component alone.

6–3. Fragment hazard assessment

a. Introduction. The evaluation of fragment hazard effects is conducted as an adjunct to the Single Package (6(a)), Stack Test (6(b)) and/or the External Fire Test (6(c)). Two methods can be used:

(1) Near field fragment sampling using collection media and velocity measurement or

(2) Fragment collection from the ground plane. The selection of the appropriate method depends on the article being evaluated (Hazard Division 1.1 or 1.2) and the resources and expertise of the testing activity.

Note. Note that the "Method 1" approach described in the previous edition of this publication (dated Dec '89), and the analytical procedures based on that method, remains valid and may be used for hazardous fragment distance determinations in lieu of the Method 1 described below.

b. Hazardous fragment. Under currently applicable explosives safety standards, a fragment hazardous to personnel in the open is defined as one whose kinetic energy at impact exceeds 79 J (58 ft-lb). An areal density of such fragments not exceeding one per 55.7 m^2 (600 ft^2) is considered acceptable.

c. Firebrands. The probability of a hit is dependent on fragment density in the same way as other fragments. However, injury or damage may result from the thermal and chemical energy content of the firebrand as well.

d. Fragment field sampling. Fragment field sampling will be accomplished using one of two methods, based on the results of single package testing.

(1) Method 1 for fragment field sampling—Single package test indicates there is a risk of mass detonation (Hazard Division 1.1 classification expected).

(a) This method is generally used for Hazard Division 1.1. articles and requires the characterization of the fragment distribution (mass, number, shape and velocity) resulting from the initiation of a single package of articles. Custom designed and constructed fragmentation arenas are used to measure these parameters. Typical construction utilizes steel plates and high speed motion picture cameras to measure fragment velocity and fiberboard collection material to capture fragments. Velocity measurement and fragment collection are accomplished as a function of ejection zone measured around the vertical axis of the package. The mass, presented area and velocity data for all fragments weighing more than 20 g (310 grains) are used as input to a simulation model FRAGHAZ (App A, Ref 12) which computes the Q–D requirements using a Monte Carlo simulation routine.

(b) It has been demonstrated that packages of Hazard Division 1.1 articles may form high density, enhanced velocity (as compared to single units) concentrations of fragments when detonated. These fragment concentrations result from the collision and interaction of fragments from adjacent articles in the package. They will produce the highest safety concern and must be characterized. It is recommended that a 360° steel plate arena similar to the one illustrated in Figure 6–3 be used to determine the position of interaction areas for the package being evaluated. The center of the package should be positioned at the geometric center of the arena. The height of the package should also be centered on the steel plates. The distance from the steel plates to the package is determined by—

$$R_p = 2*EEW^{1/3}$$

where R_p = distance between the package and steel plates (m)

and

EEW = effective explosive weight (kg)

The outside surface of the witness plates should be marked in ten degree azimuthal zones using—

$$\theta = 2\ \pi\ R_p/36$$

where θ = width of ten degree zone (m)

A single article within the package should be initiated. Determination of the unit which will produce the most hazardous fragmentation effects may require several tests for a package which contains more than one non-symmetrical detonation source. The velocity of the fragments should be measured using high-speed motion picture cameras positioned to observe the outside surface of the witness plates. The average velocity of each fragment striking the witness panel is determined by dividing the distance to the plate by the time of flight of the fragment.

(c) The design of the Fragment Collection arena is based upon the position of the fragment interaction areas measured by the Density/Velocity arena. The azimuthal zone containing the most dense, highest velocity fragments should be characterized using bundles of fiberboard panels. Each panel is 12.7 mm (0.5 in) thick, 1.2 m (4 ft) wide by 2.4 m (8 ft) tall. Nintey six panels are banded together to form a bundle. The collection bundles are positioned at a distance which will prevent severe blast damage using—

$$R_c = 4*EEW^{1/3}$$

where R_c = distance to the recovery bundles (m)

(d) The number of collection bundles required is determined by—

$$N = (2 \pi R_c/36)*42$$

(e) The collection arena should be constructed by setting the outside edge of the first collection bundle on the zero degree position of the arena as shown in Figure 6–4. The remaining bundles are positioned at radius R_c. The use of fragment ricochet traps is required to prevent fragments which impact the ground from subsequently impacting the witness plates.

(f) The package should be positioned in the center of the arena with the vertical axis of the package horizontal (i.e., packages shipped with the articles vertical should be tested horizontally and vice versa). The article which produces the highest fragment density and velocity in the Density/Velocity arena should be detonated.

(g) Fragments collected in the bundles should be recovered using the X-Y coordinate system shown in Figure 6–5. These coordinates are used by the FRAGHAZ (App A, Ref 12) model to calculate the fragment ejection zone. The fragments recovered from the collection bundles should be weighed and those weighing greater than 20 g (310 grains) should have their average presented area measured. The fragment weight, presented area, X–Y coordinates, and velocity are recorded in the format shown in Table 6–2 and are used as input to the FRAGHAZ model.

Table 6–2
Fragment data requirements

X–Y coordinates	Weight	Presented area	Velocity
(cm)	(g)	(cm^2)	(m/s)
_____	_____	_____	_____
_____	_____	_____	_____

(h) The fragmentation data collected (Table 6–2 above) are used as input to the FRAGHAZ computer program to compute the hazardous fragment areal number density distributions as a function of the number of packages/articles. The program output provides a relationship between the number of packages/articles which can be stored at a particular location and the fragment hazard range. The program utilizes the hazardous density and kinetic energy criteria (para 6–3*b*) with fragment trajectory simulations to compute the fragment hazard range for the packages/articles being evaluated.

(2) Method 2 for fragment field sampling. Single package test indicates that a risk of mass detonation need not be considered (Hazard Division 1.2 classification expected).

(a) Fragment dispersion resulting from Test 6(b) or 6(c) will be determined by visual search of surface areas within three separate 5-degree sectors, parallel and perpendicular to the longitudinal axis of the test stack, with a common point of origin at the center of the stack as shown in Figure 6–6.

(b) Sectors will be divided radially into 60 m (200 ft) wide cells out to a distance of 420 m (1400 ft), unless there are indications from other tests or data that the fragment hazard is likely to extend beyond 420 m (1,400 ft).

(c) Visual searches of these sectors will begin at the point of origin.

(d) The number of fragments found by visual search of the 5-degree sector will be reported for each 60 m (200 ft) radial increment. If fragments are observed beyond the farthest cell in a sector (generally, beyond 420 m (1400 ft)), they will be identified in the test report by size and location.

(e) The required distance for protection from hazardous fragments will be that distance immediately beyond which cells in all the search sectors contain no fragments with weights greater than 25 g (385 grains).

(f) Test reports for each of the above fragment field sampling methods will include a plan view of the test area, showing test stack dimensions and the orientation of individual units in the stack, as well as the locations of recovery packs or search sectors. The locations of any major pieces of debris, unexploded weapons or components, and unusually large fragments not collected or counted should also be reported.

(g) See paragraph 6–6 for alternate test procedures and interpretations for characterizing the fragment hazard for Hazard Division 1.2 items.

6–4. Thermal effects assessment

a. Thermal effects parameters (for Hazard Divisions 1.3 and 1.4 ammunition). For hazard evaluation purposes, the thermal effects produced by the External Fire Test 6(c) will be characterized by two parameters: The radiation field and firebrands. These properties will be determined in the following ways using ammunition items in their standard storage configuration and in their shipping containers:

(1) Thermal radiation fields. The data to be derived will be used to establish the intensity, duration, and spatial characteristics as functions of material, size of combustion zone, and burning rate, all of which extend to the distance representing that required to obtain an irradiance of 4 kw/m^2(9.55 x 10^{-2}g-cal/cm^2-sec) for a Test 6(c) mass corrected to 100 kg (220 lb) net explosive content.

(2) Firebrands. The data to be derived will be used to establish the spatial distribution (number per unit area), thermal capacity, and size of the emitted brands as functions of material and fire characteristics.

b. Thermal effects data acquisition system.

(1) Thermal flux test criteria. The ammunition thermal effects tests are to be conducted when the wind speed is 6 m/s (13 mi/h) or less in the absence of precipitation or dust storms. Uniform ignition around the periphery of the thermal source material will be accomplished with a standard igniter that will not perturb the thermal measurements.

(a) The thermal flux will be determined using appropriate radiometers with a range which includes 4 kw/m^2(9.55 x 10^{-2}g-cal/cm^2-sec).

1. The temporal and spatial characteristics of the radiation field will be measured with a series of radiometers. A minimum of three radiometers will be used in a line from the source in each of at least two perpendicular directions.

2. The second station from the source in each direction will incorporate a radiometer capable of measuring thermal energy in the range of 4 kw/m^2(9.55 x 10^{-2}g-cal/cm^2-sec) (App A, Ref 13).

3. Calibration tests can be used to provide guidance on the total range and location of the radiometers.

(b) Time-lapse color photography using one picture every two seconds is generally considered adequate to document the size of the thermal source and the combustion zone. A more rapid rate might be necessary for some ammunition items as determined in the calibration tests.

(c) The scaling relationship $(mass)^{2/3}/(distance)^2$given in the Hay and Watson reference (App A, Ref 13) can be used to determine the flux at 15 m (50 ft) for 100 kg (220 lb) of material and record.

(2) Firebrand test criteria. Firebrand effects are to be documented in the horizontal and elevation views from the burning source material. The same test conditions as specified for the thermal flux test will be used simultaneously for the firebrand tests except for the instrumentation. It is anticipated that firebrand test instrumentation may utilize remote viewing with infrared scanners, and the measurement of firebrand effects may utilize the melting of plastic sheets or the charring of wood panels.

6–5. Interpretation of results

a. General. Results of tests evaluated with respect to the pass/fail ("-"/"+") criteria given in Chapter 5 will be recorded on forms shown by example in Figures 6–7 and 6–8 given at the end of this chapter. The results are interpreted as follows:

(1) Classification. The ammunition should be classified in the light of the test results and of other relevant data according to the characteristics of the hazard division as indicated below.

(a) Sometimes, the observed hazard effects vary among replicate tests or may not correspond exactly to the definitions. When this

occurs, the DODC should use its judgment or arrange for further testing.

(b) It is prudent to err on the side of caution, particularly in the crucial decision as to whether or not a product is susceptible to mass detonation.

(c) Based on results obtained from the tests given in Chapter 5, the appropriate hazard division compatibility group can be assigned. Additionally, the appropriate UN Serial Number is determined by referring to appropriate lists of UN Numbers (see para 4–8).

(2) Airblast effects. For articles that mass detonate (Hazard Division 1.1), the NEWQD (para 6–2(f)(8)) up to 100% of the actual weight of the active ingredients will be used. For protective construction design purposes, the explosive equivalence without limitation will be used. Note that the terms "detonation," "explosion," and "deflagration" which are used as reaction descriptors for test responses that may be associated with airblast effects are defined in Chapter 2.

(3) Minimum hazardous fragment distance. Note that the minimum hazardous fragment distance (for one item) for Hazard Divisions 1.1, 1.2, and 1.3, as determined by testing, is specified in 100-ft units in parentheses preceding the hazard division designation; for example, Hazard Division (12) 1.2 indicates that the minimum fragment distance is 1200 ft for this item. Also, specification of the minimum fragment distance is required for all Hazard Division 1.2 items.

(a) For articles that mass detonate (Hazard Division 1.1), the minimum distance for personnel in the open (inhabited building) for fragment protection will be 381 m (1250 ft) unless another distance is determined by tests. For operations in which variable numbers of units* are handled, a graduated distance is permitted when the article has been adequately evaluated to determine if the distance for the minimum hazardous fragment density requirement as given in paragraph 6–3*b* and in DoD 6055.9–STD (App A, Ref 1) is less than 381m (1250 ft) for the number of units per operation. (See the report on FRAGHAZ (App A, Ref 12) in the Method 1 discussion given in paragraph 6–3*d*(1)(a)). The results of the fragment analysis will be noted in the test documentation.

Note. *A unit is to be one article for unpackaged items such as bombs or one outer package of articles for items such as fuzes. If an operation involves palletized articles, then the unit shall be considered to be a pallet load.

(b) For articles that do not mass detonate but present a fragment hazard (Hazard Division 1.2), the inhabited building distance is equated to the minimum hazardous fragment distance as determined by Method 2 (para 6–3*d*(2)) or by alternate test methods given in paragraph 6–6*b*.

(4) Thermal effects. For items that present a mass or moderate fire hazard (Hazard Division 1.3 and 1.4, respectively), firebrand throw distances and thermal flux measurements are used to characterize the hazards and determine the hazard division.

(a) The firebrand throw distance for Hazard Division 1.4 may not exceed 15 m (50 ft); otherwise, the item is classified as Hazard Division 1.3.

(b) The irradiance for a burning Hazard Division 1.4 item may not exceed that of the fire by more than 4 kw/m^2(9.55 x 10^{-2}g-cal/cm^2-sec) at a distance of 15 m (50 ft) from the edge of the Test 6(c) stack for a mass corrected to 100 kg (220 lb) net explosive content (see para 5–7c(4)(c) 3) otherwise, the item is Hazard Division 1.3.

b. Summary of test criteria and method of assessing results. The requirements summarized and referenced below are minimum for assignment of articles and materials into the appropriate hazard division. Test Series 3 tests are used to determine if a substance is forbidden for transport. Test Series 4 tests are used to determine if items with substances that failed Test Series 3 tests or new articles are forbidden for transport (see note for para 5–1*b*(3)(b)). Test Series 6 tests are used to determine whether the item is classified Hazard Division 1.1, 1.2, 1.3 or 1.4; Test Series 5 for Hazard Division 1.5; and Test Series 7 for Hazard Division 1.6. See paragraph entitled "Criteria and Method of Assessing Results"associated with each test in Chapter 5 for more details.

(1) Forbidden for transport.

(a) A substance is forbidden for transport if:

1. The solid or liquid substance is considered impact sensitive (see para 5–4*a*(4)) at a drop height of 10.16 cm (4.0 in) for solids and 25.4 cm (10.0 in) for liquids in the Bureau of Explosives Impact Machine Test 3(a)(i) (10 trials); and/or

2. The solid or liquid substance is considered friction sensitive if any of the following results are obtained from the ABL Friction Test 3(b) (iii)—visible sparks/flame, audible explosion, loud crackling noise, or detection of reaction products by a gas analyzer for a friction sensitiveness equal to or greater than dry PETN (see para 5–4*b*(4)); and/or

3. The solid or liquid substance is considered thermally unstable in the Thermal Stability Test at 75°C (Test 3(c)); that is, the substance ignites or explodes, or the substance experiences self-heating of 3°C or greater; and/or

4. The solid or liquid substance explodes or detonates in the Small-Scale Burning Test 3(d) (i).

(b) An article, packaged article, or a packaged substance is forbidden for transport if:

1. The Thermal Stability Test for Articles and Packaged Articles (Test 4(a)) (does not apply to packaged substances) results in an explosion, ignition, generation of colored fumes or odors, temperature rise exceeding 3°C experienced, or the outside casing of the package or the outside packaging is damaged; and/or

2. The Steel Tube Drop Test for Liquids (Test 4(b) (i)) results in a detonation for a drop of less than 5 m (197 in). If a local reaction occurs for a drop less than 5 m (197 in) then transport in metal packaging is prohibited unless suitability for transport can be demonstrated.

3. The Twelve Meter Drop Test for Articles and Solid Substances (Test 4(b) (ii)) (three drops with separate units) results in a fire or explosion (rupture of the package is acceptable). (NOTE: A substance that fails Tests 3(a) (i), 3(b) (iii), or 3(d) (i) may be repackaged to pass Test 4(b) (ii) to allow transport; however, substances that fail Test 3(c) are forbidden for transport regardless of packaging.)

(2) Hazard Division 1.1.

(a) Explosion of total contents (see para 5–7a(4)) in the Single Package Test 6(a) indicates a candidate for Hazard Division 1.1.

(b) If the product is accepted as Hazard Division 1.1 and the minimum hazardous fragment hazard distance does not exceed the default value of 381m (1250 ft) given in paragraph 6–5*a*(3)(a) above, then testing beyond the Single Package Test 6(a) or the Stack Test 6(b) is not necessary.

(c) If the explosion of total contents (see para 5–7*b*(4)) appears to occur almost instantaneously in either the Stack Test 6(b) or the External Fire (Bonfire) Test 6(c), then the item is assigned Hazard Division 1.1.

(3) Hazard Division 1.2. The item is assigned Hazard Division 1.2 if an explosion reaction (see Glossary) results in one or more of the following events:

(a) Explosion of total contents (see para 5–7*b*(4)) does not occur in either the Stack Test 6(b) or the External Fire (Bonfire) Test 6(c); and/or (NOTE: If two or less acceptor packages detonate in a confined stack test with four acceptor packages or more, then the packaged article can be hazard classified as Hazard Division 1.2; otherwise, it is hazard classified as Hazard Division 1.1.)

(b) Debris from the event perforates any of the three aluminum witness plates in Test 6(c); and/or

(c) More than 10 metallic projections, each with mass exceeding 25 g (385 grains), are thrown more than 50 m (165 ft) from the edge of the Test 6(c) stack; and/or

(d) Any metallic projection with mass exceeding 150 g (2300 grains) is thrown more than 15 m (50 ft) from the edge of the Test 6(c) stack.

(4) Unit risk Hazard Division 1.2. For storage application a special category of Hazard Division 1.2, unit risk, has been designated (DoD 6055.9–STD, Chap 9, para C.2.a) (App A, Ref 1). The minimum hazardous fragment distance for this category is determined using the areal number density criteria given in paragraph 6–3*b*.

Ammunition is categorized as Unit Risk Hazard Division 1.2 based on the following test results:

(a) No sympathetic detonation response in the Stack Test 6(b) or the 1.6 Article Propagation Test 7(k); and

(b) No response occurs in the External Fire (Bonfire) Test 6(c) or the 1.6 Article External Fire Test 7(g) which would require that the article be confined to Hazard Divisions 1.1, 1.2 or 1.3; and

(c) No detonation (or explosion) response in the 1.6 Article Bullet Impact Test 7(j); and

(d) No reaction more severe than burning (see para 5–8*i*(4) in the 1.6 Article Slow Cookoff Test 7(h).

(5) Hazard Division 1.3. The packaged product is assigned to Hazard Division 1.3 if none of the events which would require the product to be assigned to hazard Division 1.1 or 1.2 occur and either

(a) A fireball extends beyond any of the witness screens in the External Fire (Bonfire) Test 6(c); and/or

(b) A jet of flame extends more than 3 m (10 ft) from the flames of the fire in Test 6(c); and/or

(c) The irradiance of the burning product exceeds the criteria specified in paragraph 6–5*a*(4)(b) above; and/or

(d) Fiery projections emanating from the product are thrown more than 15 m (50 ft) from the edge of the Test 6(c) stack.

(6) Hazard Division 1.4. The packaged product is assigned to Hazard Division 1.4 and to a compatibility group other than Compatibility Group S if none of the events occur which would require the product to be assigned to Hazard Divisions 1.1, 1.2, or 1.3 and either—

(a) Any indentation is observed on any of the three screens in the External Fire (Bonfire) Test 6(c); and/or

(b) A projection, thermal effect or blast effect is observed during the External Fire (Bonfire) Test 6(c) which would significantly hinder fire-fighting or other emergency response efforts in the immediate vicinity (5 m (15 ft)) of the package.

(7) Hazard Division 1.4 Compatibility Group S. The packaged product is assigned to Hazard Division 1.4S if—

(a) None of the events occur which would require the product to be assigned to Hazard Divisions 1.1, 1.2, 1.3, or to Hazard Division 1.4 (compatibility group other than Group S) or 1.6N.

(b) None of the projections, thermal effects or blast effects observed during the External Fire (Bonfire) Test 6(c) would significantly hinder fire-fighting or other emergency response efforts in the immediate vicinity (5 m (15 ft)) of the package.

Note. See paragraph 5–7*c*(4)(f) for criteria for excluding a product from Class 1 that has satisfied requirements for Hazard Division 1.4S.

(8) Hazard Division 1.5. A substance is assigned to Hazard Division 1.5 if—

(a) The substance is not "cap sensitive"(see para 5–6*a*(4)) in the Cap Sensitivity Test 5(a) (three trials); and/or

(b) A hole is not blown through the witness plate of the DDT Test 5(b) (ii) (three trials); and/or

(c) The substance does not explode (see para 5–6*c*(4)) in the External Fire Test for Hazard Division 1.5 (Test 5(c)); and/or

(d) The substance neither ignites and burns (mildly or vigorously) nor explodes at any time during five consecutive trials (different samples) of the Princess Incendiary Spark Test 5(d).

(9) Hazard Division 1.6. An article is assigned to Hazard Division 1.6 if it only contains EIDS (extremely insensitive detonating substances) and responds as indicated to the following substance (EIDS) and article (1.6) tests.

(a) The substance is considered EIDS if—

Note. EIDS must also pass Test Series 3 so as not to be forbidden for transport. See paragraph 6–5*b*(1) above.

1. The substance does not detonate in the EIDS Cap Test 7(a) (three trials); and

2. The substance does not detonate (punch a clean hole through the witness plate) in the EIDS Gap Test 7(b) (three trials) with the 70 mm (2.76 in) PMMA gap; and

3. The airblast, averaged over ten trials, at 3.05 m (10 ft) does not exceed 27 kPa (3.9 psi) for a 333 m/sec (1093 ft/sec impact in the Susan Impact Test 7(c) (i) – or – in the alternate Friability Test 7(c) (ii) (three trials) the average dp/dt is less than 15 MPa/ms (150 bars/ms); and

4. The substance does not explode nor detonate in the EIDS Bullet Impact Test 7(d) (i) (six trials) – or – in the alternate Friability Test 7(d) (ii) (three trials) the average dp/dt is less than 15 MPa/ms (150 bars/ms); and

5. The substance does not detonate nor react violently with a fragment of mass exceeding 1 g (15 grains) and range more than 15 m (50 ft) in the EIDS External Fire Test 7(e); and

6. The substance does not detonate nor react violently (fragmentation of one or two end caps and fragmentation of the tube into more than three pieces) in the EIDS Slow Cookoff Test 7(f) (three trials); and

(b) The article is considered a Hazard Division 1.6 article if it contains only EIDS and if—

1. None of the events occur during the 1.6 Article Fire Test 7(g) which would require the article to be assigned to Hazard Divisions 1.1, 1.2, or 1.3; and

2. The reaction is no more severe than burning (see para 5–8*i*(4)) in the 1.6 Article Slow Cookoff Test 7(h); and

3. There is not a detonation (or explosion) response (burning or deflagration responses are acceptable) in the 1.6 Article Bullet Impact Test 7(j); and

4. There is no sympathetic detonation response (see para 5–8*k*(4)) in the 1.6 Article Propagation Test 7(k).

c. Data recording. The substance and ammunition data forms shown by example in Figures 6–7 (DD Form 2738) and 6–8 (DD Form 2739), respectively, will be used to record the results of the hazard classification tests. DD Forms 2738 and 2739 will be reproduced on 8 1/2- by 11-inch paper. DD Forms 2738 and 2739 may be electronically generated, provided the content, format, and sequencing of each electronic version is consistent with the current approved edition. The electronically generated form will be identified by entering "EG"in parentheses, upper case, after the date of the form, i.e., DD Form 2738, JUL 96 (EG).

Note. An approved electronic copy of DD Forms 2738 and 2739 may be obtained from the web site: http://web1.whs.osd.mil/diorhome.htm.

6–6. Alternate tests

Alternate tests to be used for assigning hazard classification must be specifically referenced in the hazard classification data package for review using the administrative procedures provided in Chapter 3.

Note. Optional tests in the UN protocol (App A, Ref 6) are acceptable alternate tests.

a. Hazard Division 1.1.

(1) As an alternative to conducting the Method 1 test series (para 6–3*d*(1)), the Stack Test 6(b) (para 5–7*b*) may be conducted once without confinement in order to permit collection of fragment/airblast data without the attenuating effects of the confinement.

(2) When the end item will be assigned to Hazard Division 1.1 because of the risk of mass detonation, an iteration of the Stack Test 6(b) (para 5–7*b*) may be performed without confinement for fragment hazard analysis in place of the External Fire (Bonfire) Test 6(c) (para 5–7*c*). When the fragment hazard will be determined in this manner, and when necessary to assure detonation of the total contents of the stack, individual items will be primed for simultaneous detonation.

b. Hazard Division 1.2. The standard method for collecting and analyzing the minimum hazardous fragment distances based on the maximum hazardous fragment throw distances for Hazard Division 1.2 is Method 2 using an External Fire (Bonfire) Test 6(c) which is outlined in paragraph 6–3d(2). Inhabited building distance is equated to the minimum hazardous fragment distance. The following alternate test method results in a minimum fragment distance in 100-ft increments with a 200-ft minimum fragment distance.

(1) Test(s)—Conduct single unconfined Stack Test 6(b) and/or single Bonfire Test 6(c) with 360° fragment recovery.

(2) Minimum fragment distance—Determine the maximum hazardous fragment throw distance, round the distance up to the next

100-ft increment, and define as the minimum hazardous distance (inhabited building distance) for the ammunition item.

c. Hazard Division 1.3. Solid propellant rocket motors for which it is impractical to conduct the hazard classification tests given in Chapter 5 present special concerns. The following guidance for alternate testing is provided:

(1) The shock sensitivity of the propellants shall be measured at the diameter at which the material maintains a stable detonation (if at all) up to the web thickness for the rocket propellant or eight inches (super large-scale gap test), whichever dimension is less. The methodology is outlined in Figure 6–9.

(a) Gap Test for Solids and Liquids. Figure 5–7 presents a schematic of the Gap Test 2(a) (iii) with the 5.08 cm (2 in) PMMA gap. This test is employed with variable PMMA gaps to establish a stable detonation (if at all).

(b) EIDS Gap Test 7(b). Figure 5–26 presents a schematic of the EIDS Gap Test (with the 70 mm (2.76 in) PMMA gap shown)) which shall be used with a variable PMMA gap for substances which do not maintain a stable detonation in Test 2(a) (iii) with a zero gap.

(c) Super Large-Scale Gap Test (SLSGT). Figure 6–10 presents a schematic of the SLSGT (with a variable PMMA gap shown) which shall be used for substances which do not maintain a stable detonation in the Test 7(b) with a zero gap.

(d) Criteria. A solid rocket motor using this test protocol with propellants that maintain a stable detonation with any PMMA or zero gap with Test 2(a) (iii), Test 7(b), or the SLSGT (as appropriate) is hazard classified Hazard Division 1.1; otherwise, the rocket motor is a candidate for Hazard Division 1.3.

(2) Any accident data generated during large motor development that documents the propellant response is to be included in the hazard classification data package.

(3) Solid rocket motors should be tested singly (if transported singly) in the Bonfire Test 6(c); however, storage configurations may require that multiple items be tested.

(4) Motor firing data for ignition function is acceptable in lieu of single package hazard classification testing.

(5) Large rocket motor responses for conditions given in paragraphs 6–6*c*(2) through 6–6*c*(4) above that produce airblast and/or fragment hazards beyond the Hazard Division 1.3 quantity-distances given by Table 9–10 in DoD 6055.9–STD (App A, Ref 1) for the quantity of propellant involved are hazard classified Hazard Division 1.1 regardless of the results obtained using paragraph 6–6*c*(1)(d).

d. Qualification tests (MIL-STD–1751A) acceptable for hazard classification (App A, Ref 14). The following qualification tests specified in MIL–STD–1751A are acceptable alternate tests for hazard classification tests using pass/fail criteria provided in Chapter 5 herein:

(1) Test A–01.001 Impact Test (Laboratory Scale)—Bureau of Explosives Apparatus is an acceptable alternate test procedure for hazard classification Test 3(a) (i) (para 5–4*a*) with pass/fail criteria given in paragraph 5–4*a*(4).

(2) Test A–102.001 Friction Sensitivity—ABL Sliding Anvil Test is an acceptable alternate test procedure for hazard classification Test 3(b) (iii) (para 5–4b) with pass/fail criteria given in paragraph 5–4*b*(4).

(3) Test A–104.001 Large-Scale Gap NOL Method is an acceptable alternate test for Gap Test 2(a) (iii) as used for paragraphs 6–6*c*(1)(a) and 7–3*a*(1).

(4) Test A–104.003 Super Large Scale Gap Test is an acceptable alternate test procedure for the large solid rocket motor hazard classification Super Large Scale Gap Test (SLSGT) (para 6–6*c*(1)(c)) with criteria given in paragraph 6–6*c*(1)(d)). See Figure 6–10.

(5) Test A–104.004 Explosive Shock Sensitivity Test-Expanded Large Scale Gap Test NSWC Method is an acceptable alternate test procedure for hazard classification Test 7(b) (para 5–8*b*) with pass/fail criteria given in paragraph 5–8*b*(4) for a 70 mm (2.76 in) PMMA gap.

(6) Test A–105.001 Cap Test is an acceptable alternate test procedure for hazard classification Test 5(a) (para 5–6*a*) with pass/fail criteria given in paragraph 5–6*a*(4) and Test 7(a) (para 5–8*a*) with pass/fail criteria given in paragraph 5–8*a*(4).

(7) Test A–111.001 Thermal Stability is an acceptable alternate test procedure for hazard classification Test 3(c) (para 5–4*c*) with pass/fail criteria given in paragraph 5–4*c*(4).

e. Hazard assessment tests (MIL–STD–2105B) acceptable for hazard classification (App A, Ref 15). The following hazard assessment tests specified in MIL–STD–2105B are acceptable alternate test procedures (with noted additional requirements) for hazard classification tests using pass/fail criteria provided in Chapter 5 herein.

(1) The 40-Foot Drop Test is an acceptable alternate test procedure for hazard classification Test 4(b) (ii) (para 5–5*c* with pass/fail criteria given in paragraph 5–5*c*(4)).

(2) The Fast Cookoff Test is an acceptable alternate test procedure for hazard classification Test 6(c) (para 5–7*c*) and Test 7(g) (para 5–8*h*) with pass/fail criteria given in paragraphs 5–7*c*(4) and 5–8*h*(4), respectively if—

(a) Multiple items (three or number to satisfy the volume ”requirement in paragraph 5–7*c*(3)(b), whichever is greater) in the transport/storage configuration are tested;

(b) The fire lasts a minimum of 30 minutes (unless disrupted by an item test failure that results in a classification of Hazard Division 1.1 (para 5–7*c*(4)(a)); and

(c) Witness screens and radiometric measurements required in paragraph 5–7*c*(3)(h) and 5–7*c*(4)(c) 3, respectively, are used.

Note. Two Fast Cookoff Tests (satisfying criteria specified in para 6–6*e*(2)(b) and 6–6*e*(2)(c), above) are acceptable for one hazard classification Test 6(c) or 7(g) if the item response for each of the tests is a reaction no more severe than burning as defined in paragraph 5–8h(4). A reaction more severe than burning in any test would require that a test be conducted with a minimum of three items.

(3) The Slow Cookoff Test is an acceptable alternate test procedure for hazard classification Test 7(h) (para 5–8*i*) with pass/fail criteria given in paragraph 5–8*i*(4) if—

(a) The test item is in the transport/storage configuration;

(b) The temperature (linear rate of 3.3°C/hour) is controlled within +/- two percent up to 365°C; and

(c) Fragmentation data are collected.

(4) The Bullet Impact Test is an acceptable alternate test procedure for hazard classification Test 7(j) (para 5–8*j*) with pass/fail criteria given in paragraph 5–8*j*(4) if–

(a) The test item is in the transport/storage configuration;

(b) The firing rate for three 12.7 mm (0.5 in) rounds is 600 +/- 50 rounds/minute (100 ms +/- 9 ms between impact);

(c) The test item is secured in a holding device capable of restraining the item against dislodgement by the projectiles;

(d) The impacting armor-piercing rounds penetrate the most sensitive material(s) that are not separated from the main explosive charge by barriers or other safety devices;

(e) The rounds impact within a circular target area of 50 mm (2 in) diameter without passing through the same hole;

(f) The test is conducted three times (different orientations).

(5) The Sympathetic Detonation Test is an acceptable alternate test procedure for Test 6(b) (para 5–7*b*) and Test 7(k) (para 5–8*k*) with pass/fail criteria given in paragraphs 5–7*b*(4) and 5–8*k*(4), respectively if—

(a) The test items are in the transport/storage configuration;

(b) The test is conducted three times;

(c) One of the three 7(k) tests is conducted without confinement to allow collection of airblast and fragment/debris data. Note: One of the three 6(b) tests may be conducted without confinement. (See paras 6–3*d*(1) and 6–6*a*.)

Table 6–1
Hemispherical TNT surface burst--peak pressure and positive impulse

		PRESSURE, P (kPa) Equation constants			
RANGE,Z ($m/kg^{1/3}$)	A	B	C	D	E
0.2-2.9	7.2106	-2.1069	-0.3229	+0.1117	+0.0685
2.9-23.8	7.5938	-3.0523	+0.40977	+0.0261	-0.01267
23.8-198.5	6.0636	-1.4066	0	0	0

		PRESSURE, P (psi) Equation constants			
RANGE, Z ($ft/lb^{1/3}$)	A	B	C	D	E
0.5-7.25	6.9137	-1.4398	-.2815	-0.1416	+0.0685
7.25-60	8.8035	-3.7001	+0.2709	+0.0733	-0.0127
60-500	5.4233	-1.4066	0	0	0

		IMPULSE, I ($kPa\text{-}ms/kg^{1/3}$) Equation constants			
RANGE, Z ($m/kg^{1/3}$)	A	B	C	D	E
0.2-0.96	5.522	+1.117	+0.600	-0.292	-0.087
0.96-2.38	5.465	-0.308	-1.464	+1.362	-0.432
2.38-33.7	5.2749	-0.4677	-0.2499	+0.0588	-0.00554
33.7-158.7	5.9825	-1.062	0	0	0

		IMPULSE, I ($psi\text{-}ms/lb^{1/3}$) Equation constants			
RANGE, Z ($ft/lb^{1/3}$)	A	B	C	D	E
0.5-2.41	2.975	-0.466	+0.963	+0.030	-0.087
2.41-6.0	0.911	+7.260	-7.459	+2.960	-0.432
6.0-85	3.2484	+0.1633	-0.4416	+0.0793	-0.00554
85-400	4.7702	-1.062	0	0	0

Equation Form:

$$P,I = \exp(A+B*(Ln(Z))+C*(Ln(Z))^2+D*(Ln(Z))^3+E*(Ln(Z))^4)$$

P in kPa, Z in $m/kg^{1/3}$
P in psi, Z in $ft/lb^{1/3}$

I in $kPa\text{-}ms/kg^{1/3}$, Z in $m/kg^{1/3}$
I in $psi\text{-}ms/lb^{1/3}$,Z in $ft/lb^{1/3}$

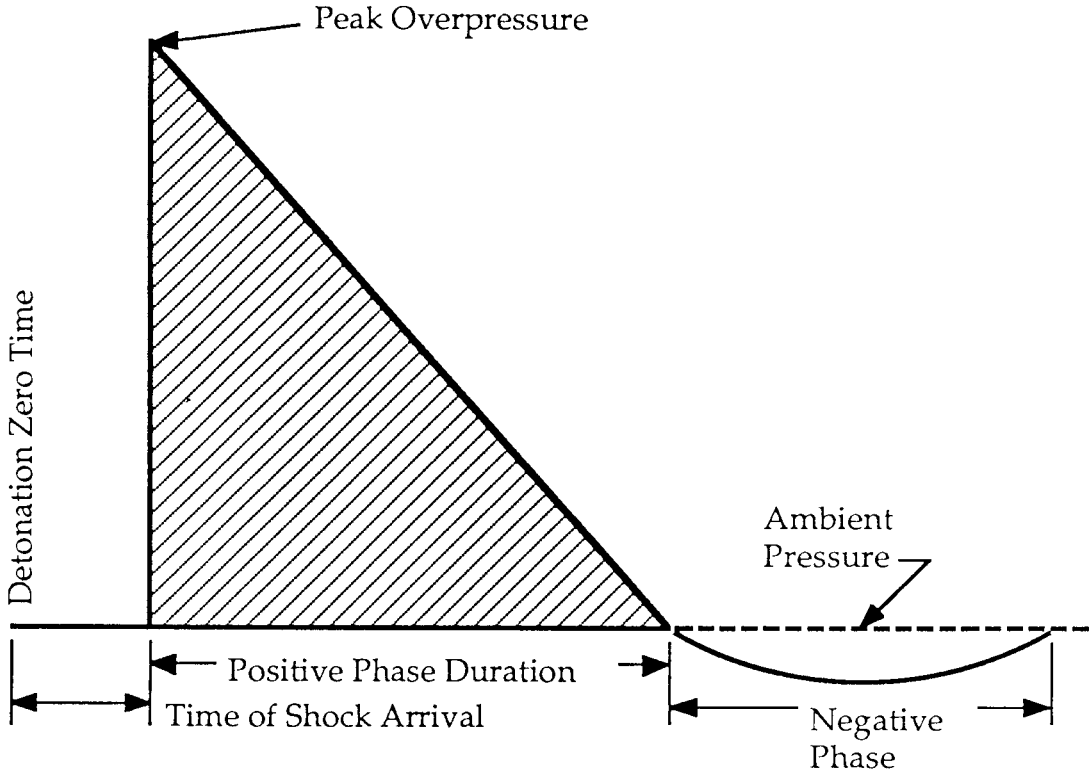

See Paragraph 6-2.*a*.

Figure 6-1. Idea overpressure vs. time history

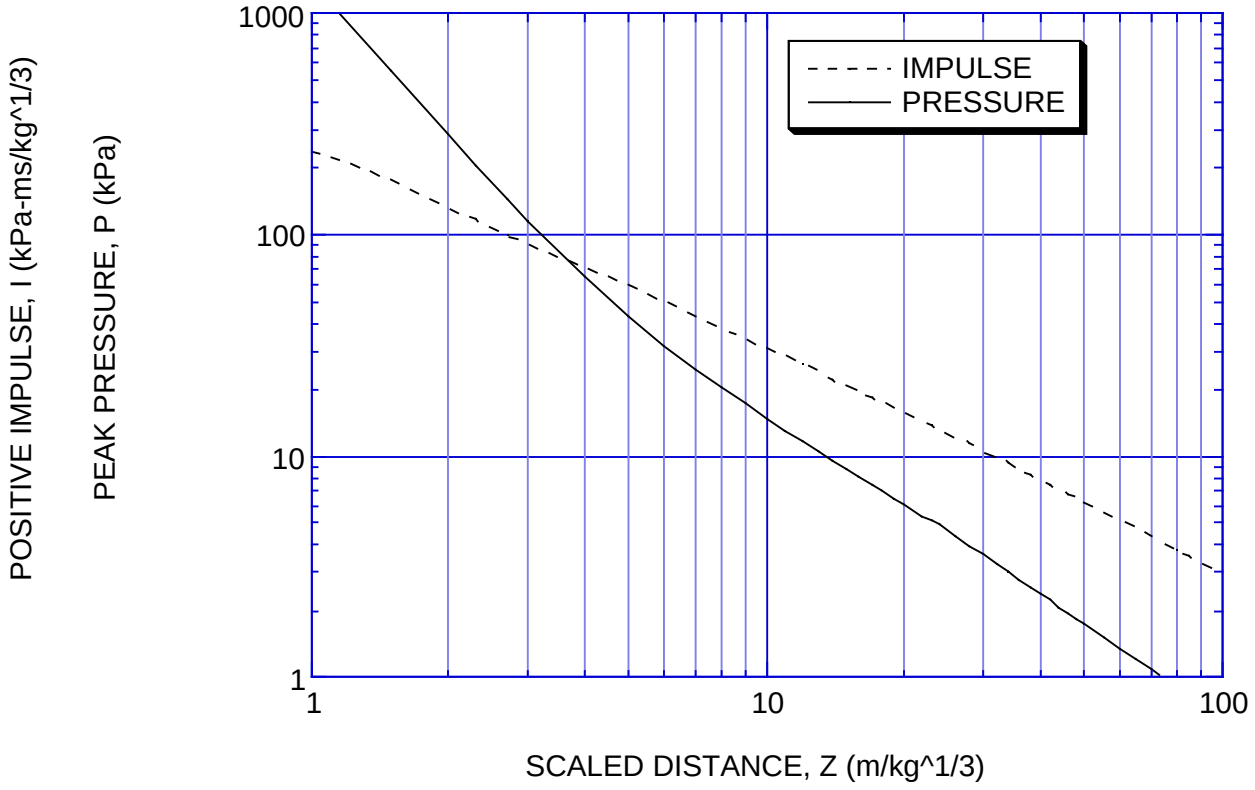

See Paragraph 6-2.*f*(3).

Figure 6-2. Hemispherical TNT surface burst—peak pressure and positive impulse

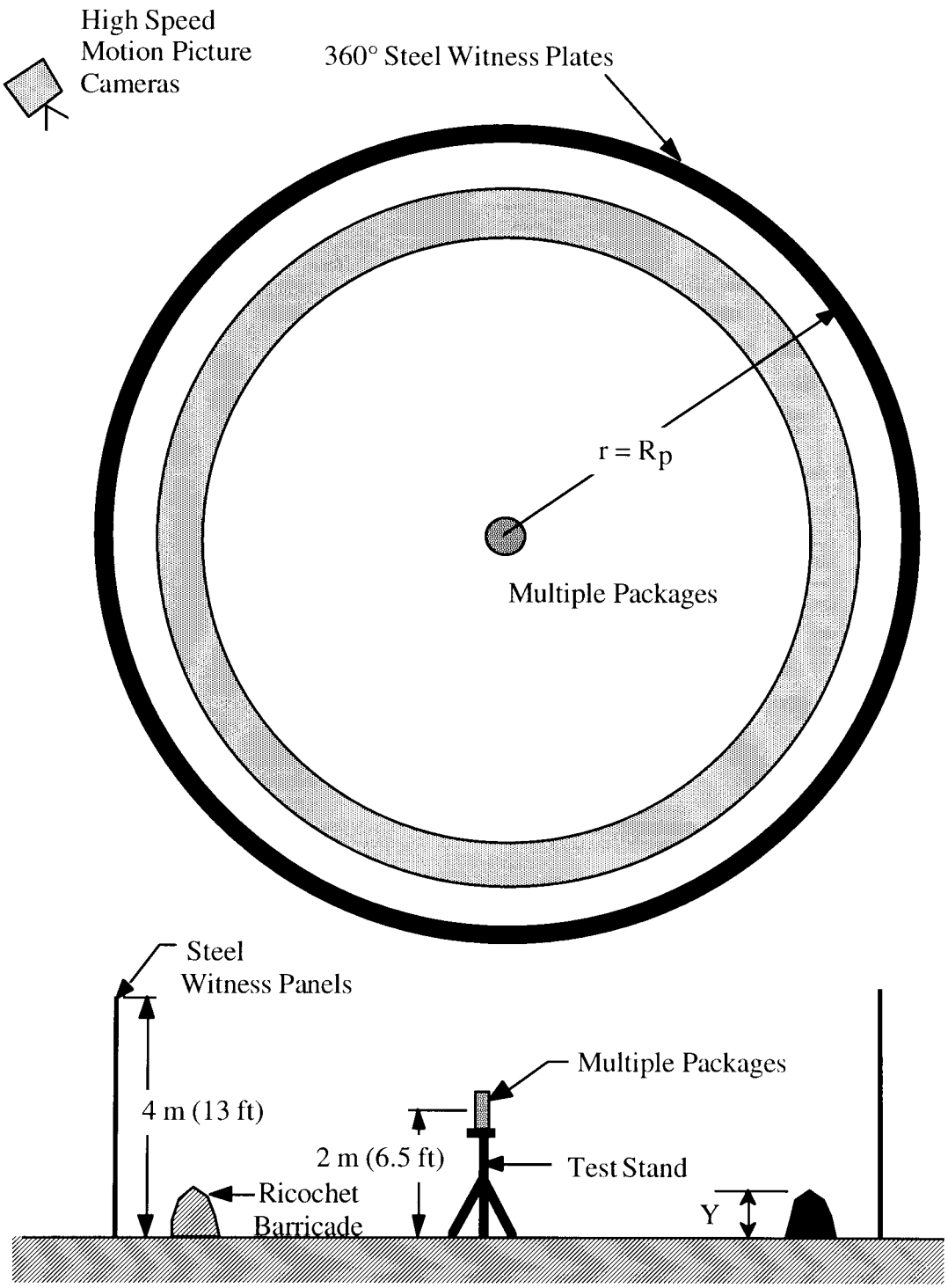

NOT TO SCALE

Notes: See Figure 6-4 for ricochet fence dimensions.
See Paragraph 6-3.*d*(1)(*b*).

Figure 6-3. Velocity/density arena configuration—method 1

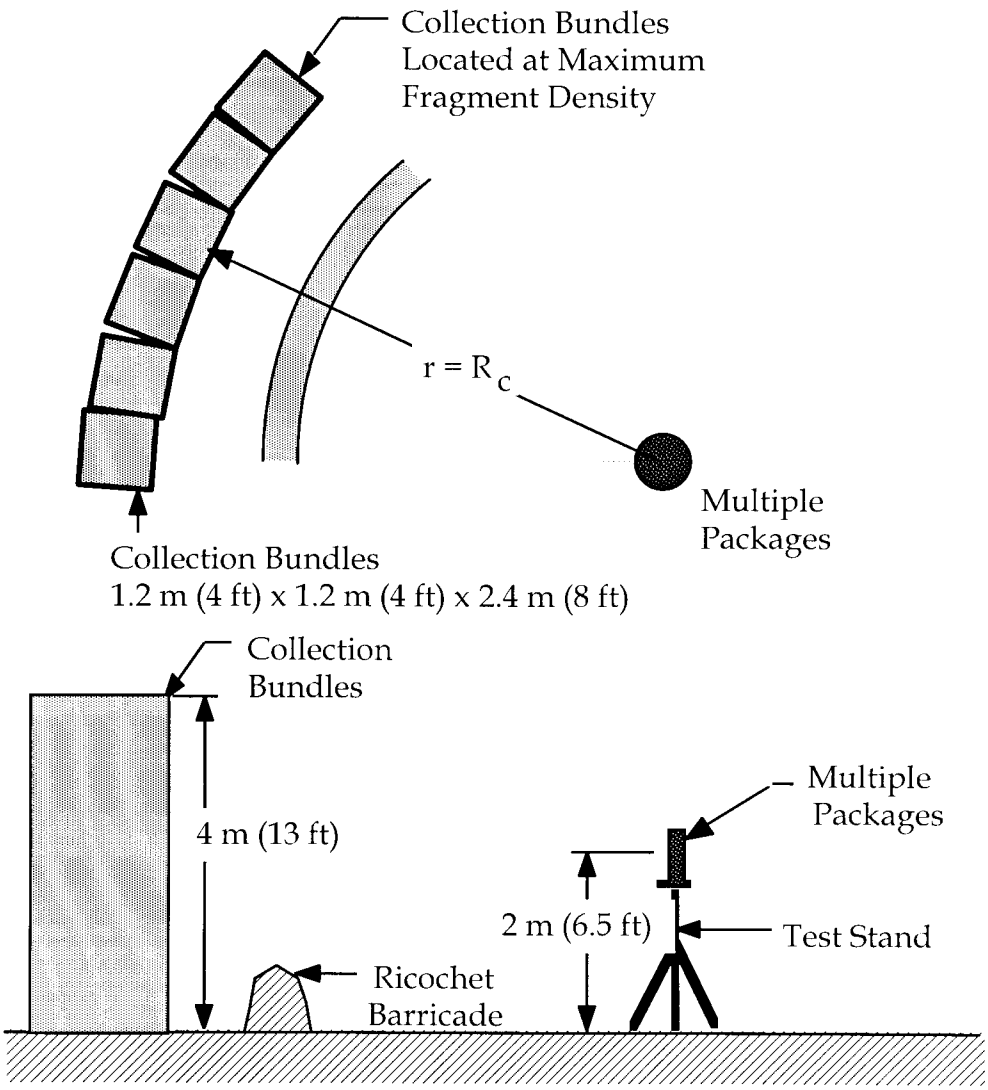

NOT TO SCALE

Distance to ricochet fence

	r	=	2KCHD/(C+K)
where	r	=	radius to center of ricochet fence from center of test item
	D	=	distance to fiberboard or witness plate from center of test item
	H	=	height of center of test item above ground
	K	=	1/(H-h)
where	h	=	distance between ground and bottom of fiberboard or witness plate
	C	=	1/(H+h+L)
where	L	=	length of fiberboard or witness plate

Height of ricochet fence

	Y	=	H(K-C)/(C+K)
where	Y	=	height of ricochet fence at radius r
	K	=	1/(H-h)

See Paragraph 6-3.*d*(1)*(e)*.

Figure 6-4. Fragmentation characterization arena—method 1

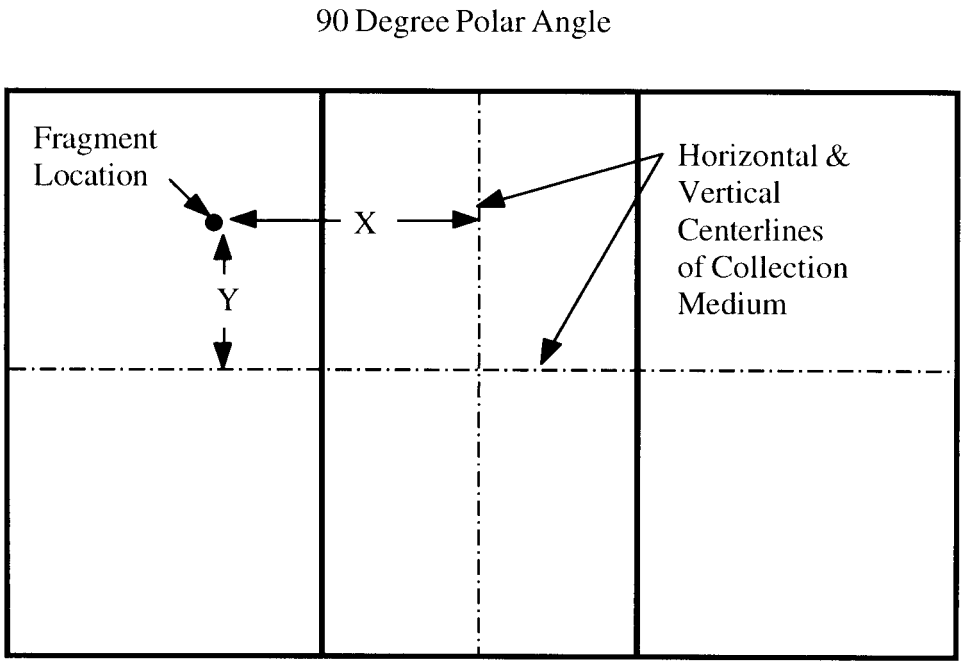

See Paragraph 6-3.*d*(1)(*g*).

Figure 6-5. Fragment collection coordinate system—method 1

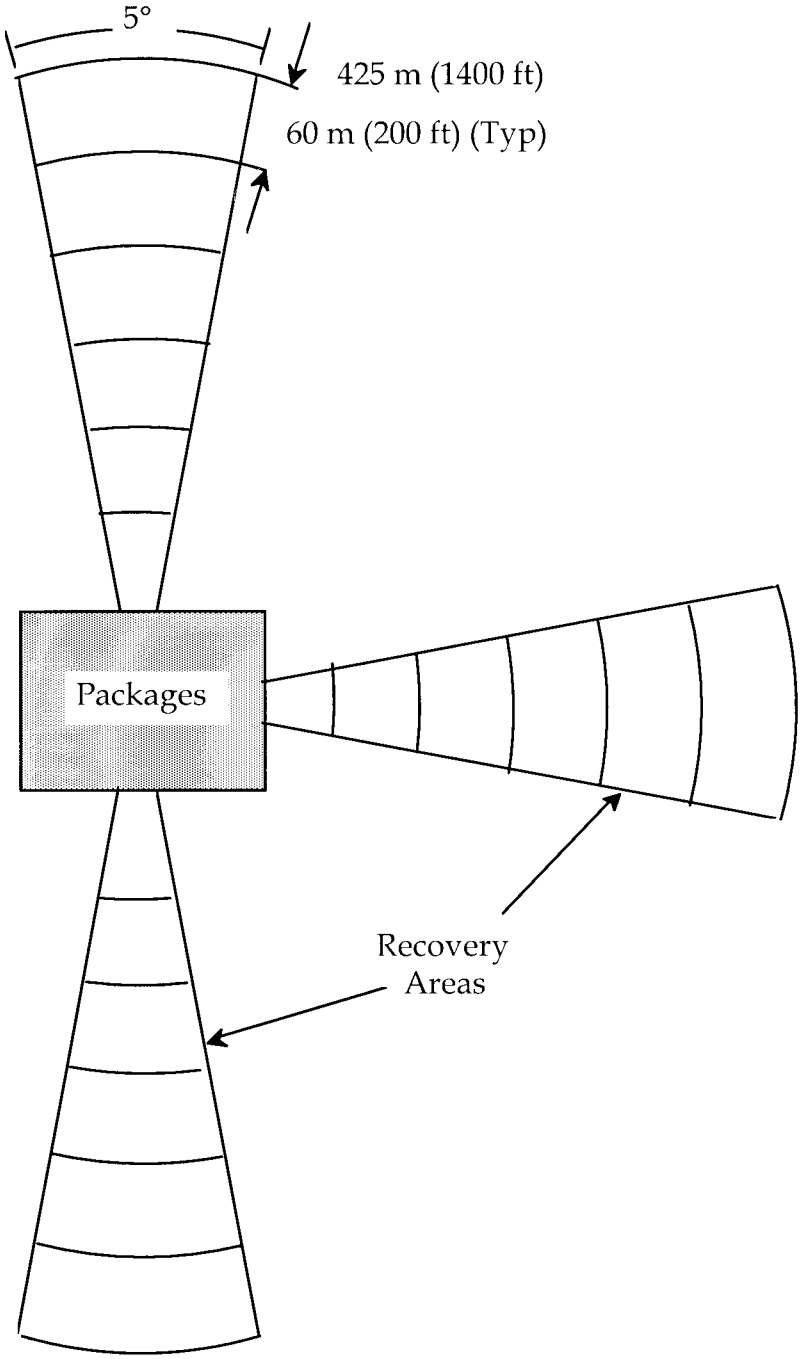

NOT TO SCALE

See Paragraph 6-3.*d*(2)*(a)*.

Figure 6-6. Fragment recovery areas for tests 6(b) and 6(c)—method 2

SUBSTANCE CLASSIFICATION TEST RESULTS

1. REQUESTING AGENCY	2. DATE (YYYYMMDD)
Indian Head Division, Naval Surface Warfare Center, Indian Head, MD	960229

3. SUBSTANCE IDENTITY	4. ASSIGNED CLASSIFICATIONS/DESIGNATIONS	5. UN NUMBER
PBXW-XXX	HD 1.1	Not Assigned

SECTION I - TEST SERIES 3

6. BUREAU OF EXPLOSIVES IMPACT MACHINE (Test 3(a)(i))	a. NUMBER OF TRIALS	b. HEIGHT (cm)	c. NUMBER FLAME/ EXPLOSION/ NOISE	d. NUMBER NO REACTION	e. NUMBER DECOMPOSITION/SMOKE (No noise)	f. PASS/FAIL
	25	39	5	10	5	Pass
	RDX/HMX	19	5	10	5	Pass

7. ABL FRICTION TEST (Test 3(b)(iii)) - PETN TIL FORCE (N): 80	a. NUMBER OF TRIALS	b. TIL FORCE (N)	c. SPARKS	d. FLAME	e. EXPLOSION	f. NOISE	g. PASS/FAIL
	20	121	0	0	0	0	Pass
			h. THRESHOLD OF INITIATION (TIL) FORCE (N) 121				

8. THERMAL STABILITY TEST AT 75° C (Test 3(c))	a. DETONATED (X)	b. IGNITED (X)	c. DECOMPOSITION (X)	d. FINAL TEMPERATURE (°C)	e. PASS/FAIL
	YES: [ ] NO: [X]	YES: [ ] NO: [X]	YES: [ ] NO: [X]	75	Pass

9. SMALL SCALE BURNING TEST (Test 3(d)(ii))	a. SAMPLE	b. EXPLOSION (X)	c. DETONATION (X)	d. BURN (X)	e. PASS/FAIL
[redacted]	1			X	Pass
	2			X	Pass
	3			X	Pass

SECTION II - TEST SERIES 4

10. STEEL TUBE DROP TEST FOR LIQUIDS	a. DENSITY (g/cm3 (lb/gallon))	b. TEMPERATURE (°C (°F))	c. MAXIMUM HEIGHT TESTED WITH NO DETONATION (mm (in))	d. PASS/FAIL

11. 12-METER DROP TEST FOR SOLID SUBSTANCES	a. SAMPLE	b. ATTITUDE	c. REACTION	d. PASS/FAIL

SECTION III - TEST SERIES 5

12. CAP SENSITIVITY TEST (Test 5(a))	a. NUMBER OF SAMPLES	b. COMPRESSION LENGTHS OF LEAD CYLINDER (mm (in))	c. HOLE IN WITNESS PLATE (X)	d. PASS/FAIL
	5	0	YES: [ ] NO: [X]	Pass

13. DDT TEST (Test 5(b)(iii))	a. SAMPLE	b. HOLE IN WITNESS PLATE (X) YES	NO	c. PASS/FAIL
[redacted]	1			
	2			
	3			

14. EXTERNAL FIRE TEST FOR HAZARD DIVISION 1.5 (Test 5(c))	a. NUMBER OF SAMPLES	b. NUMBER OF EXPLOSIONS	c. NUMBER OF BURNS	d. PASS/FAIL

15. PRINCESS INCENDIARY SPARK TEST (Test 5(d))	a. SAMPLE	b. IGNITION (X) YES	NO	c. PASS/FAIL
[redacted]	1			
	2			
	3			
	4			
	5			

SECTION IV - TEST SERIES 7

	a.	b.
16. EIDS CAP TEST (Test 7(a))	DETONATION (X) YES: [ ] NO: [ ]	PASS/FAIL
17. EIDS GAP TEST (Test 7(b))	DETONATION (X) YES: [ ] NO: [ ]	PASS/FAIL
18. SUSAN IMPACT TEST (Test 7(c)(i))	AVERAGE PRESSURE FOR TEN TESTS = kPa (psi)	PASS/FAIL

DD FORM 2738, JUL 96 (EG)

Designed using Perform Pro, WHS/DIOR, Jul 96

Figure 6-7. Sample substance data base recording form

SECTION IV - TEST SERIES 7 *(Continued)*

19. FRIABILITY TEST *(Test 7(c) and 7(d)(ii))*	a. AVERAGE DP/DT FOR THREE TESTS = MPa/ms (bars/ms)	b. MASS RECOVERED g (grains)	c. PASS/FAIL

20. EIDS BULLET IMPACT TEST *(Test 7(d)(i))*	a. SAMPLE NUMBER	b. EXPLODE *(X)* YES	b. EXPLODE *(X)* NO	c. DETONATE *(X)* YES	c. DETONATE *(X)* NO	d. PASS/FAIL
	1					
	2					
	3					
	4					
	5					
	6					

21. EIDS EXTERNAL FIRE TEST *(Test 7(e))*	a. MAXIMUM FRAGMENT MASS g (grains)	b. MAXIMUM FRAGMENT DISTANCE m (ft)	c. PASS/FAIL

22. EIDS SLOW COOKOFF TEST *(Test 7(f))*	a. SAMPLE NUMBER	b. FRAGMENTS *(X)* YES	b. FRAGMENTS *(X)* NO	c. DETONATE/VIOLENT REACTION *(X)* YES	c. DETONATE/VIOLENT REACTION *(X)* NO	d. PASS/FAIL
	1					
	2					
	3					

SECTION V

23. FLASH POINT TEST FOR LIQUID EXPLOSIVES	a. FLASH POINT (°C (°F))	b. PASS/FAIL

SECTION VI - OPTIONAL TESTS

24. GAP TEST FOR SOLIDS AND LIQUIDS *(Test 1(a)(iii))*	a. SAMPLE NUMBER	b. PROPAGATION *(X)* YES	b. PROPAGATION *(X)* NO	c. PASS/FAIL
	1		X	Pass
	2		X	Pass
	3		X	Pass

25. INTERNAL IGNITION TEST *(Test 1(b)(ii))*	a. SAMPLE NUMBER	b. FRAGMENTS *(X)* YES	b. FRAGMENTS *(X)* NO	c. PASS/FAIL
	1			
	2			
	3			

26. SLOW COOKOFF BOMB TEST *(Test 1(b)(iii))*	a. TIME *(Min/sec)*	b. TEMPERATURE (°C (°F))	c. SCB RUPTURED *(X)* YES NO	d. SCB FRAGMENTED *(X)* YES NO	e. WITNESS PLATE DEFORMED *(X)* YES NO	f. WITNESS PLATE PUNCTURED *(X)* YES NO	g. PASS/FAIL

27. GAP TEST FOR SOLIDS AND LIQUIDS *(Test 2(a)(iii))*	a. SAMPLE NUMBER	b. SAMPLE LENGTH *(cm (in))*	c. STABLE PROPAGATION *(X)* YES	c. STABLE PROPAGATION *(X)* NO	d. HOLE IN WITNESS PLATE *(X)* YES	d. HOLE IN WITNESS PLATE *(X)* NO	e. WITNESS PLATE THICKNESS *(mm (in))*	f. TUBE FRAGMENTED *(X)* YES	f. TUBE FRAGMENTED *(X)* NO	g. PASS/FAIL
	1									
	2									
	3									

28. INTERNAL IGNITION TEST *(Test 2(b)(ii))*	a. SAMPLE NUMBER	b. PIPE FRAGMENTED *(X)* YES	b. PIPE FRAGMENTED *(X)* NO	c. END CAPS FRAGMENTED *(X)* YES	c. END CAPS FRAGMENTED *(X)* NO	d. PASS/FAIL
	1					
	2					
	3					

29. SLOW COOKOFF BOMB (SCB) TEST *(Test 2(b)(iv))*	a. TIME *(Min/sec)*	b. TEMPERATURE (°C (°F))	c. SCB RUPTURED *(X)* YES NO	d. SCB FRAGMENTED *(X)* YES NO	e. WITNESS PLATE DEFORMED *(X)* YES NO	f. WITNESS PLATE PUNCTURED *(X)* YES NO	g. PASS/FAIL

SECTION VII

30. REMARKS *(Test Report Citations)*

1. NSWCIHD letter 8020 R11-JFL dtd 13 Jul 1989; Sub: Request for Assignment of Explosive Hazard Classification
2. NSWCIHD letter 8000 Ser 3120G/11 dtd 27 Jul 1989; Sub: Sensitivity Data

DD FORM 2738 (BACK), JUL 96

Figure 6-7A. Sample substance data base recording form (cont.)

AMMUNITION CLASSIFICATION TEST RESULTS

1. DATE (YYYYMMDD)	2. SECURITY CLASSIFICATION	3. TEST AGENCY	4. TESTING SERVICE	5. TESTING REFERENCE
960311		NSWCIHD	U.S. Navy	NAVSEAINST 8020.8B

6. ADDRESS OF SPONSORING SERVICE

a. STREET	b. CITY	c. STATE	d. ZIP CODE
23 Strauss Avenue	Indian Head	MD	20640-5555

7. NATIONAL STOCK NUMBER	8. CALIBER OR WEIGHT	9. ITEM NAME AND MODEL DESIGNATION
DODIC:	152mm (6.0in) diameter	TOW2A, BGM-71E-5B

10. TYPE OF PACKAGE AND PACKING MATERIALS
Single wall, extruded aluminum container (0.09 in. thick), standard dunnage

11. GROSS WEIGHT OF ITEM *(Round, Bomb, etc.) (KG (lb))*	12. NUMBER OF ITEMS IN EACH PACK	13. GROSS WEIGHT OF PACK *(KG (lb))*	14. WEIGHTS OF EXPLOSIVE(S)/ITEM *(KG (lb))*			
			a. 1.1	b. 1.3	c. 1.5	d. EIDS
30 (66)	9	270 (594)	28.6 (63)	55.2 (121.5)		

15. TOTAL QUANTITY	16. NET EXPLOSIVES WEIGHT FOR Q-D (NEWQD)	17. HIGH EXPLOSIVES WEIGHT (HEW) *(KG (lb))*	18. NET PROPELLANT WEIGHT (NPW) *(KG (lb))*
83.8 (184.5)	56.2 (123.75)	28.6 (63)	55.2 (121.5)

19. HAZARD DIVISION	20. COMPATIBILITY GROUP	21. DOT IDENTIFICATION NUMBER *(UN Serial No.)*
1.1	E	

22. AUTHORITY AND FORWARDING CORRESPONDENCE

23. THERMAL STABILITY TESTS FOR ARTICLES AND PACKAGES *(Test 4(a))*

a. DETONATED		b. IGNITED		c. FUMES/ODOR		d. FINAL TEMPERATURE *(°C (°F))*	e. PASS/FAIL
YES	NO	YES	NO	YES	NO		
	X		X		X	75 (168)	Pass

24. 12-METER DROP TEST FOR SOLID SUBSTANCES *(Test 4(b)(ii))*

a. ARTICLE	b. ATTITUDE	c. REACTION	d. PASS/FAIL
1	Horizontal	None	Pass
2	Vertical (nose down)	None	Pass
3	Vertical (tail down)	None	Pass

DD FORM 2739, JUL 96 (EG) Designed using Perform Pro, WHS/DIOR, Jul 96

Figure 6-8. Sample ammunition data base recording form

25. SINGLE PACKAGE TEST *(UN Test 6(a))*	
a. NUMBER OF TESTS	b. TEST RESULTS

26. STACK TEST *(UN Test 6(b))*		
a. NUMBER OF TESTS	b. NUMBER OF PACKAGES IN TEST	c. TEST RESULTS

27. EXTERNAL FIRE TEST *(Bonfire, UN Test 6(c))*	
a. NUMBER OF PACKAGES IN TEST	b. TEST RESULTS

28. 1.6 ARTICLE EXTERNAL FIRE TEST RESULTS *(UN Test 7(g))*		
a. NUMBER OF PACKAGES IN TEST	b. TEST RESULTS	c. PASS/FAIL

29. 1.6 ARTICLE SLOW COOKOFF TEST RESULTS *(UN Test 7(h))*		
a. NUMBER OF TESTS	b. TEST RESULTS	c. PASS/FAIL

30. 1.6 ARTICLE BULLET IMPACT TEST RESULTS *(UN Test 7(j))*		
a. NUMBER OF TESTS	b. TEST RESULTS	c. PASS/FAIL

31. 1.6 ARTICLE PROPAGATION TEST RESULTS *(UN Test 7(k))*			
a. NUMBER OF TESTS	b. NUMBER OF ARTICLES IN TEST	c. TEST RESULTS	d. PASS/FAIL

32. REMARKS *(Test Report Citations)*
NSWCDD/TR-92/258, Vulnerability and Hazard Assesment Test Results for the TOW-2A (BGM-71E) Missile System

DD FORM 2739 (BACK), JUL 96

Figure 6-8A. Sample ammunition data base recording form (cont.)

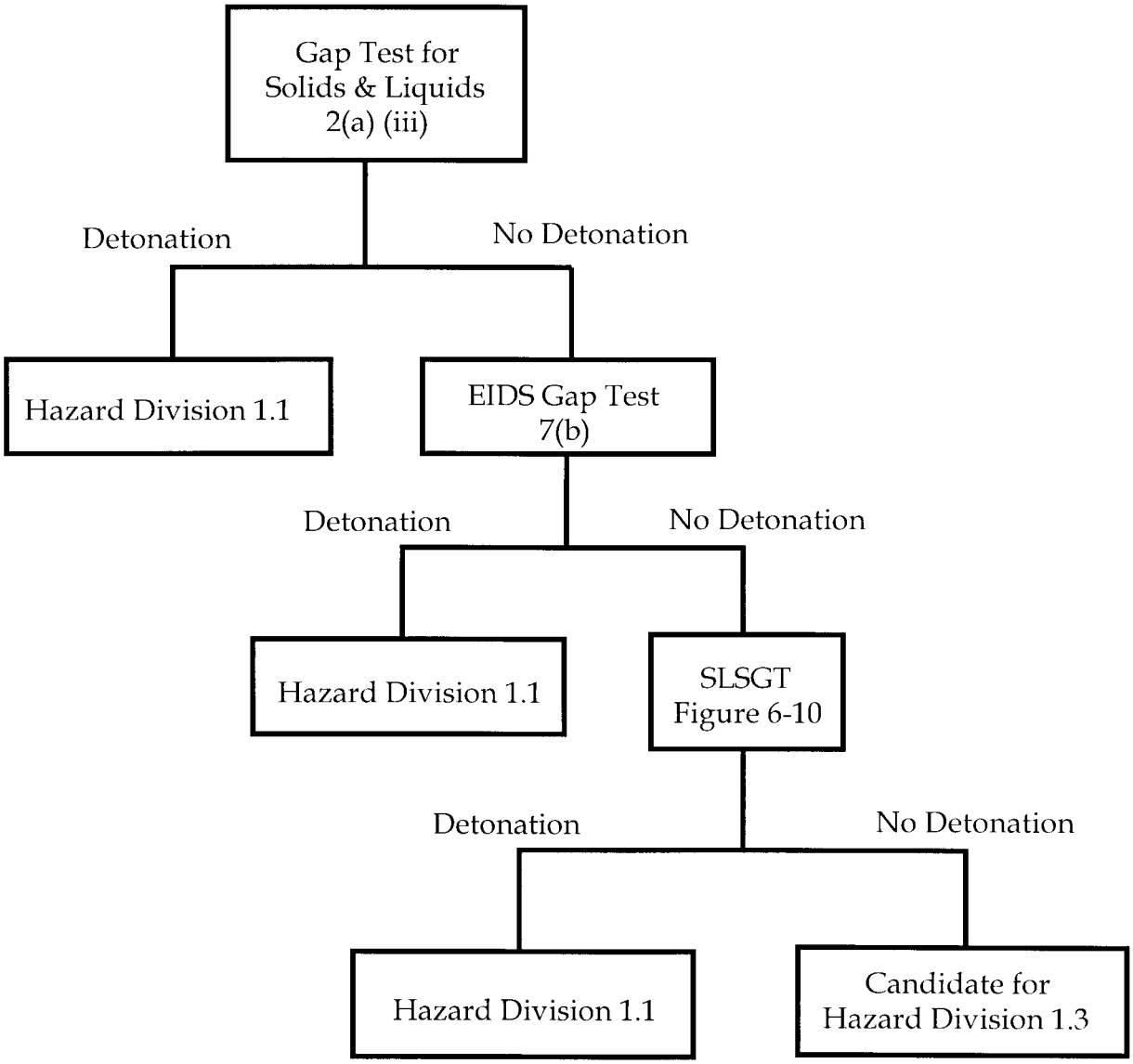

NOTES: Need only test up to card gap dimension that just exceeds the web thickness of the propellant in the rocket motor.

See Paragraph 6-6.*c*(1).

Figure 6-9. Solid rocket motor card gap test protocol

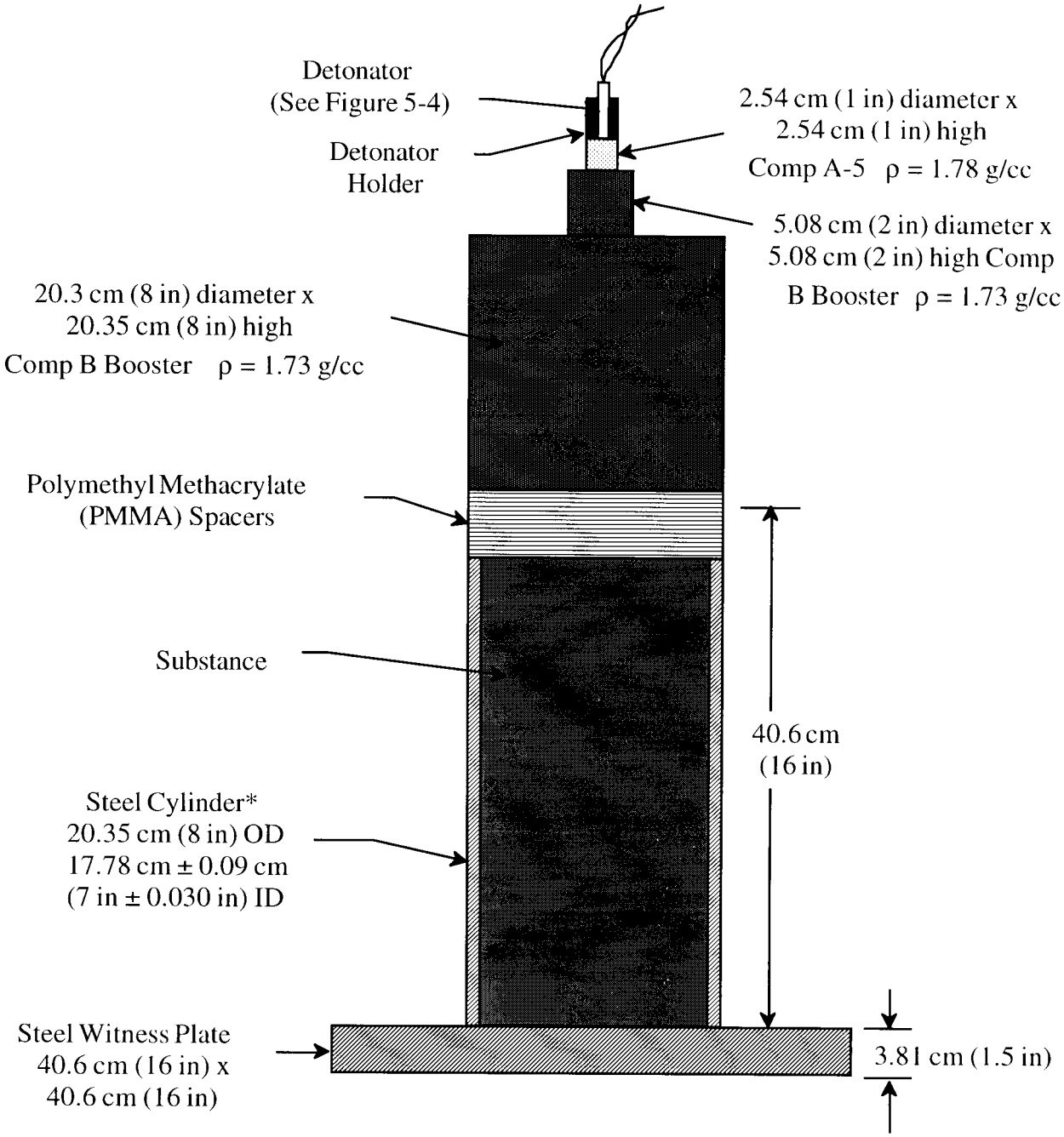

*May be machined from welded carbon steel tubing (1026) drawn over mandrel (DOM), spec: A513, size: 8 inch OD x 1/2 inch wall.

NOT TO SCALE

See Paragraph 6-6.*c*(1)(*c*).

Figure 6-10. Super large-scale gap test configuration

Chapter 7

Interim hazard classification

7–1. General

Interim hazard classifications are assigned for a variety of reasons. For example, during the course of programs for the acquisition of new explosives and ammunition items, explosive substances and devices must be transported from places where they are manufactured or assembled to testing facilities. Typically, these shipments are made at times during the development cycle when hardware configurations are subject to frequent significant changes. See paragraph 1–7 for shipment of laboratory samples.

a. Quantities of test items sufficient to support STANAG 4123 (App A, Ref 2) and DoD storage hazard classification tests are normally not available. Furthermore, extensive testing may not be economically justifiable to support one or a few shipments of such developmental configurations.

b. Consequently, it is frequently necessary to hazard classify explosive items on an interim basis with less information than is usually available regarding production items that are ready for release into the military inventory. This chapter includes guidance pertaining to responsibilities and procedures for the determination, documentation, and administrative control of interim hazard classifications.

7–2. Authority

a. The organization sponsoring development of, or first adopting for use, an explosive substance or assembly is responsible for providing the requisite data to the cognizant interim hazard classification authority for each new interim hazard classification or renewal required.

b. DoD or U.S. Department of Energy (DOE) Interim Hazard Classification of an ammunition and explosive must be approved (by signature) by one of the following persons:

(1) U.S. Army.

Chief, Explosives Safety Test Management
U.S. Army Technical Center for Explosives Safety
ATTN: SIOAC–EST
Savanna, IL 61074–9639

(2) U.S. Navy.

Director, Weapons and Explosives Safety Division
ATTN: N71
Naval Ordnance Center
23 Strauss Avenue
Indian Head, MD 20640–5555

(3) U.S. Air Force.

Air Force Safety Center
ATTN: SEWV
9700 Avenue G
Kirtland AFB, NM 87117–5670

(4) U.S. Department of Energy.

(a) Director, Occupational Safety and Health Division.

Director, Occupational Safety and Health Division
U.S. Department of Energy
Albuquerque Operations Office
Albuquerque, NM 97115–5400

(b) Program Manager, Hazardous Materials Transportation.

Program Manager, Hazardous Materials Transportation
U.S. Department of Energy
Oakland Operations Office
Oakland, CA 94612–5208

c. For DoD, the names of the persons holding the above listed positions or their alternate will be provided, through the DDESB and the Military Traffic Management Command (MTMC), to the Associate Administrator for Hazardous Materials Safety, Materials Transportation Bureau, RSPA/DOT, 400 7th Street, S.W., Washington, DC 20590. MTMC will furnish notification that DoD has placed the names on file at DOT.

d. For DOE, the names of the persons holding the above listed positions or their alternate will be provided through the Transportation Management Division (TMD) EM–261, to the Associate Administrator for Hazardous Material Safety, Materials Transportation Bureau, RSPA/DOT, 400 7th Street S.W., Washington, DC 20590, on a current basis. TMD will furnish notification that DOE has placed the names on file at DOT.

e. The chiefs of the U.S. Army, U.S. Navy and U.S. Air Force offices identified in Appendix A, Reference 3 may, with DDESB concurrence, authorize additional persons to grant (by signature) interim hazard classification approvals, subject to all the conditions and procedures of this chapter. At the time of publication these authorized persons are:

(1) U.S. Army.

(a) Chief, System Safety Office.

Chief, System Safety Office
U.S. Army Armament Research, Development, and Engineering Center
ATTN: AMSTA–AR–QAS
Picatinny Arsenal, NJ 07806–5000

(b) Chief, Safety Office.

Chief, Safety Office
U.S. Amy Edgewood Research, Development, and Engineering Center
ATTN: SCBRD–ODR–S
Aberdeen Proving Ground, MD 21010–5423

(c) Chief, Infrastructure Management Division.

Chief, Infrastructure Management Division
U.S. Army Research Laboratory Command
ATTN: AMSRL–CS–AL–RK
2800 Powder Mill Road
Adelphi, MD 20783–1145

(d) Chief, Safety Office.

Chief, Safety Office
U.S. Army Aviation and Missile Command
ATTN: AMSAM–SF
Redstone Arsenal, AL 35898–5130

(e) Chief, Safety Office.

Chief, Safety Office
U.S. Army Space and Strategic Defense Command
ATTN: CSSD–TC–WS
P.O. Box 1500
Huntsville, AL 35807–3801

(2) U.S Navy.
(a) Indian Head Division.

Indian Head Division
Naval Surface Warfare Center
ATTN: Code 041B
101 Strauss Ave.
Indian Head, MD 20640–5035

(b) Program Management Office.

Program Management Office
Strategic Systems Programs Detachment
P.O. Box 157
Magna, UT 84044–0157

(3) U.S. Air Force.
(a) HQ Ogden Air Logistics Center.

HQ Ogden Air Logistics Center
ATTN: LIWOS (Chief, Explosives Safety Team)
6043 Elm Lane (Bldg 1246
Hill AFB, UT 84056–5819

(b) Chief, Systems Safety.

Chief, Systems Safety
Air Force Development Test Center
ATTN: AFDTC/SES
Eglin AFB, FL 43542–6817

f. The names of persons to whom approval authority is delegated will be provided to the Associate Administrator for Hazardous Materials Regulation (DOT) and to the Department of Defense Explosives Safety Board (DDESB–KT), on a current basis. Acknowledgement from MTMC that DoD has placed the names on file with DOT is required.

g. The approval authority for DOE interim hazard classifications may not be delegated. Interim hazard classifications must be signed by one of the persons designated in paragraph 7–2*b* (4) or their alternates.

7–3. Limitations

a. Interim hazard classifications assigned to substances must be supported by results from Series 3 tests (para 5–4). In order to obtain an interim Hazard Division 1.3 classification then the following two tests also need to be conducted:

Note. Use format given by example in Figure 6–7 to report results.

(1) Test 2(a) (iii)—Use Gap Test for Solids and Liquids (para 5–3*a*) with a 14 cm (5.5 in) tube (and sample) length and a 9.5 mm (3/8 in) thick witness plate. The substance is interim hazard classified as Hazard Division 1.1 if a positive (+) response is obtained with a PMMA gap greater than or equal to 17.78 mm (0.7000 in -70 cards); otherwise, the substance may be interim hazard classified as Hazard Division 1.3. The U.S. Army Armament Research, Development and Engineering Center (ARDEC) Solid Propellant Shock Initiation Sensitivity Test (App A, Ref 16) is an acceptable alternate test for solid gun propellants. A solid gun propellant is interim classified as Hazard Division 1.1 if the reaction front propagates steadily with a PMMA gap greater than or equal to 7.6 mm (0.3 in) with the ARDEC test; if the reaction front velocity is decaying, then the solid gun propellant may be interim classified as Hazard Division 1.3.

(2) Test 5(a)—Cap Sensitivity Test (para 5–6*a*). The substance is interim hazard classified as Hazard Division 1.1 if a positive (+) response is obtained with a standard detonator; otherwise, the substance may be interim hazard classified as Hazard Division 1.3.

b. Interim hazard classification (which must include an appropriate compatibility group) may be issued for a period up to one year. Extension beyond one year will require a request from the originator, with justification, for renewal by the issuing organization. Interim hazard classifications need not be submitted to DOT for filing.

c. Any change in packaging or explosive components in an item will require reexamination of the item by the cognizant interim hazard classification authority listed in this chapter in order to ascertain the need for revision of the interim hazard classification.

d. Interim hazard classifications are not recognized for international shipments by commercial carrier. When international shipment by commercial carrier is necessary for ammunition and explosives without final DoD hazard classifications, a DOT Classification of Explosives with EX number assignment is required. (See para 3–1*b*). Interim hazard classifications and justifications for international shipment, required in conjunction with a request for a DOT Classification of Explosives with EX number assignment, may be issued for a period of up to two years.

e. Any incident involving loss of contents of the package must be reported to the Associate Administrator for Hazardous Materials Regulations, DOT; the Chairman, DDESB, or the DOE, Director, TMD; and the authority granting the interim as listed in 7–2*b*.

f. The interim hazard classification procedures apply only to DoD agencies and DoD contractors, or to DOE and DOE contractors, respectively.

7–4. Documentation

a. The following data, as applicable, will be provided as a part of the interim hazard classification request:

(1) Item nomenclature.
(2) Part numbers.
(a) Prime Contractor.
(b) Vendor.
(3) National stock number.*
(4) System the item is associated with.
(5) Next higher assembly item is used with.
(6) Size of unpackaged item.
(7) Weight of unpackaged item.
(8) Explosive compositions.
(9) Net explosive weight.
(10) Physical description of item.
(11) Functional description of item.
(12) Packaging data.
(13) Description of fuze safety features.

Note. *Unique contractor part numbers or product codes are allowed for interim hazard classifications.

b. A central file will be maintained by each organization to which interim hazard classification authority is delegated. The documentation of each hazard classification will be kept in a manner permitting rapid retrieval for as long as shipments or storage of the configuration may be necessary. A copy of the hazard classification will be expeditiously furnished, upon receipt of a proper request, to any organization required to store or transport an item that has been assigned an interim hazard classification.

c. A copy of each DoD interim hazard classification must be provided to the Chairman, DDESB. A copy of each DOE interim hazard classification must be provided to the Director, TMD and to the Chairman, DOE Explosive Safety Committee.

d. A copy of the applicable DoD or DOE interim hazard classification approval must be carried aboard each vehicle used to transport ammunition and explosives covered by this chapter.

e. For DOE, shipments by cargo aircraft may only be transported by an air carrier authorized by an exemption to carry explosives. The air carrier, exemption held by the carrier, and type of explosive to be carried, must be identified to and approved in writing by the Office of Hazardous Materials Exemptions and Approvals prior to

each shipment, or be authorized by provision of an authorized DOT exemption.

Chapter 8
Joint hazard classification system

8–1. Introduction

This chapter provides information and procedures concerning hazard classification data in the Joint Hazard Classification System (JHCS), hereinafter referred to as the JHCS.

8–2. Background

a. The JHCS is a data base containing hazard classification and safety data for explosive items, ammunition and ammunition related items (i.e., items containing some Class 1 material) of the DODCs. The information contained in the JHCS is necessary for safe storage and transportation. The JHCS was established to promote consistency among DoD hazard classification actions, to eliminate duplication and conflict among component hazard classification assignments, and to provide a single source document of authoritative and controlled hazard classification data for the entire DoD.

b. The JHCS contains the following data elements for DoD explosive items, ammunition and ammunition-related items:

(1) DODC code — this code indicates which component is the proponent of an item's hazard classification.

(2) Tri-Service coordination code — this code indicates whether or not Tri-Service coordination has been completed.

(3) Item nomenclature.

(4) Department of Defense identification code (DODIC), Locally Assigned Ammunition Reporting Code (LARC), or Navy Ammunition Logistic Code (NALC).

(5) National Stock Number (NSN).

(6) DOD hazard division transportation and storage Compatibility Group (CG).

(7) United Nations (UN) Serial Number.

(8) Department of Transportation (DOT) hazard class (pre-1991).

(9) DOT marking (with supplementary expansion) (pre–1991).

(10) DOT label (pre–1991).

(11) Hazard symbol.

(12) High explosive weight (HEW) (in units of pounds and kilograms).

(13) Net propellant weight (NPW) (in units of pounds and kilograms).

(14) Net explosive weight (NEW) — the total of all Class 1 material used for transportation purposes (in units of pounds and kilograms).

(15) Net explosive weight for Q–D (NEWQD) — that combination of explosive weight and propellant weight used to determine the explosive weight used for quantity-distance purposes (in units of pounds and kilograms).

(16) Part number and/or drawing number.

c. The above data will be sorted in the following sequences for output purposes:

(1) NSN.

(2) Federal Stock Class (FSC)/ DODIC/National Item Identification Number (NIIN).

(3) Part number (drawing number)/NSN.

(4) Alphabetical listing by Item Nomenclature.

8–3. Responsibilities and procedures

a. A JHCS control record will be generated for any addition, deletion or change to the JHCS. A sample of the data base record is provided in Table 8–1. Each DODC is responsible for completing the record with the appropriate data elements for the desired additions, deletions and changes to the JHCS.

b. All completed control records for revising the JHCS will be forwarded to the Director, U.S. Army Technical Center for Explosives Safety, ATTN: SIOAC–EST, Savanna, IL 61074–9639. A review of the information will be performed to determine acceptability of the entry and for compliance with the procedures in this publication.

c. The Director, U.S. Army Technical Center for Explosives Safety, will be responsible for distribution of the JHCS printouts to DODCs, world-wide distribution of the quarterly printed JHCS microfiche, inputting data into the JHCS, and maintaining the JHCS to include the on-line service.

Table 8–1
Joint Hazard Classification System control record

Position	Acronym	Data Entry Field	Spaces
0	TC (TRANS CD)	(A)	1
1	DOD–COMP	(A)	1
2	TRI–SVC–COORD	(Y)	1
3	NSN	(1305013480192)	13
4	ITEM–NOMEN	(CARTRIDGE, 25MM, APFSDS–T, M919)	48
5	DODIC	(A986)	4
6	IBD	(04)	2
7	DOD–HCD	(1.2)	3
8	CG	(C)	1
9	HAZ–SYM–CD	( )	2
10	UN–SER–NO	(0328)	4
11	EX–REG	(9502042)	11
12	HIGH–EXPL–WT	(0.0046)	7
13	NET –PROPEL–WT	(0.2095)	7
14	NET–EXPL–WT	(0.2141)	7
15	NET–EXPLO–WGT–QD	(0.2141)	7
16	PART–OR–DWG–1	(9391187)	16
17	PART–OR–DWG–2	(12938117)	16
18	PART–OR–DWG–3	(12929427)	16
19	PSN	(CARTRIDGES FOR WEAPONS, INERT PROJECTILE)	150
20	TECH– NAME	( )	50

d. The JHCS will be distributed on microfiche on a quarterly basis. The fiche is available for unlimited distribution. Anyone desiring a copy of the microfiche and/or placement on automatic distribution for the fiche should send a request to: Director, U.S. Army Technical Center for Explosives Safety, ATTN: SIOAC–ESM, Savanna, IL 61074–9639 (DSN 585–8710 or Commercial (815) 273–8710).

e. The JHCS is available through an on-line format. Contact the same address and telephone numbers in the previous paragraph to request access (password and login/ID) and procedures. Contact may be also made by electronic mail at jhcs@dac-emh1.army.mil. The JHCS may also be accessed on the Hazard Classification Home Page at http://192.108.244.100/es/est/hc.html.

8–4. Department of Transportation (DOT) changes

a. In 1991 the DOT adopted into federal law a different system for hazard classification of dangerous goods. The new system is essentially that which is used by United Nations for the transportation of dangerous goods. The total phase-in period for the new system is ten years. The 49 CFR (App A, Ref 3) has more detailed information regarding the different phase-in periods for specific situations and should be consulted as the authoritative source. The JHCS will continue to have the old DOT information for the entire phase-in period of ten years.

b. For new items added to the JHCS after April 1991, there will be no DOT (old system) information added.

c. For those items added after April 1991, the DOT hazard class for Class 1 items will be the DoD Hazard Division Compatibility Group. Any parenthetical values appearing in the DoD hazard class will not be included in the DOT hazard class. For those items where the DoD Hazard Division Compatibility Group is other than Class 1

(i.e., Class 2–9), the DOT class will consist only of the DoD Hazard Division. No Compatibility Group for Class 2–9 will be included in the DOT hazard class; whereas, it will be for DoD.

d. For those items entered in the JHCS after April 1991, the DOT label for Class 1 items will be the word "Explosive" followed by the DOT hazard class (i.e., 1.2C). For Class 2–9 consult 49 CFR (App A, Ref 3).

e. For those items entered after April 1991, the DOT container marking for Class 1 items will consist of the Proper Shipping Name (as defined by the UN Serial Number), the UN Serial Number, and the NSN or part number. The NSN or part number may be used only if it is directly traceable to a DOT assigned registration number (i.e., "EX" number). All of these data elements are in the JHCS.

8–5. Completion of control record for JHCS revision

a. Each element allows sufficient space for hazard classification data. There are a total of 20 available data entries for each item entered into the JHCS.

b. Each data element and the available codes that are incorporated on the record are provided in Table 8–2.

Table 8–2
JHCS control record data elements

FIELD POS	DATA ITEM IDENTIFICATION	SIZE/CLASS	EXPLANATION
0	Transaction Code (TC), Definition: A code that identifies the effect that input will have on the automated file.	1A	Enter a code which describes the transaction being reported as follows: A—Add. Establish a record for an item. C—Change. Change selective data elements already established for an NSN. D—Delete. Delete an established record for an NSN. Each control record for deletion must contain data in field positions 1, 2, and 3 and a D in position.
1	DOD Component(DOD—COMP). Definition: A code that designates which Service is the proponent of the item's hazard classification.	1A	Enter one of the following: A—Army F—Air Force N—Navy I—Undetermined
2	Tri-Service Coordination TRI–SVC–COORD) Definition: A code that indicates whether Tri-Service agreement has been reached on the hazard classification.	1A	Enter one of the following: Y—Yes N—No X—Yes, by Panel in Jul 89 T—Not new O or P—Yes, to establish the same NSN a maximum of three times to record variable data related to the number of boxes and/or different manufacturers in shipments of certain material.
3	National Stock Number (NSN) Definition: A number composed of a four-digit Federal Supply Classification and a nine-digit National Item Identification Number (NIIN)	16AN	Enter 13 numerals as defined: Example: 1337–00–269–5030
4	Item Nomenclature (ITEM–NOMEN) Definition: A description consisting of a noun phrase or modifier and identifying the make, model, size, etc., of the item.	48AN	Enter description of the item up to 48 characters long. Example: IGNITER ROCKET MOTOR Leave unused, trailing positions of the field blank.
5	Department of Defense Identification Code ((DODIC) Definition: A code assigned to a generic description of an item of supply in Federal Stock Group 13 (Ammunition and Explosives) and Federal Stock Group 14 (Guided Missiles). A locally Assigned Ammunition Reporting Code (LARC) for the Air Force or a Navy Ammunition Logistic Code (NALC) may be used.	4AN	Enter a four digit alphanumeric identification, as assigned, otherwise, leave blank. Examples: V835; VY80; VY80.
6	Inhabited Building Distance (IBD) Definition: The minimum separating distance hundreds of feet) for specified levels of protection of inhabited buildings and personnel in the open from hazardous fragments or firebrands produced by ammunition and explosives items as determined by tests in accordance with the Technical Bulletin. It will appear within parentheses.	2N	Enter two numerals to report the inhabited building distance for the item in hundreds of feet; otherwise, leave blank. Sample entries: 04=400 feet 12=1,200 feet
7	DoD Hazard Division (DOD–HCD) Definition: The hazard division designator denotes both the hazard class and division for the material. The hazard class is a designator to denote that the material is explosive, compressed gas, flammable gas, flammable liquid or solid, oxidizing substances, poisonous (toxic), radioactive, corrosive, or miscellaneous hazardous material. The (hazard) division is a designator assigned to denote the character and predominance of the associated hazards and the potential for causing personnel casualties or property damage.	3AN	Enter a numeral for the DoD hazard class, a period (.), and a numeral for the DoD (hazard) division for the item. Available classes: HD Explosive: 1.1, 1.2, 1.3, 1.4, 1.5, 1.6 Compressed Gas: 2.1, 2.2, 2.3 Flammable Liquid: 3 Flammable Solids: 4.1, 4.2, 4.3 Oxidizing Substance: 5.1, 5.2 Poisonous (toxic): 6.1, 6.2 Radioactive material: 7 Corrosive: 8 Miscellaneous Hazards: 9 Non-Regulated N.R Sample entry: 1.2 *Note.* All HD 1.2 items must have an IBD (field position 6) filled in or the control record will be rejected.

Table 8–2
JHCS control record data elements—Continued

FIELD POS	DATA ITEM IDENTIFICATION	SIZE/CLASS	EXPLANATION
8	Compatibility Group (CG) Definition: In view of transportation and storage principles, the grouping of ammunition and explosives is usually obvious from the description of the item. See Chapter 4 of the publication. All classes will include CG.	1AN	Enter one of the following: A, B, C, D, E, F, G, H, J, K, L, N, S
9	Hazard Symbol Code (HAZ–SYM–CD) Definition: A pseudo-code used to identify specific hazard symbols required for storage.	2A	Enter one or a maximum of two letters. See Table 8–5 for hazard symbol codes.
10	United Nations Serial Number (UN–SER–NO) Definition: The identification of a hazardous material assigned by the United Nation's regulatory authorities.	4N	Enter four numerals assigned for domestic and international identification of the item. The HD (field position 7) and SCG (field position 8) must be in agreement with the UN number selected. If not, the data record will be rejected. For Non-regulated items, use all zeros, i.e., 0000. Example: 0314
11	Department of Transportation (DOT) EX Registration Number (DOT–EX–REG–NO) and suffix(es)	11AN	Enter the seven digit and possibly letter(s) that are received from DOT when the DoD places an item on file with the DOT as required per 49 CFR 173.56. Example: 8709021 or 9112123AB
12	High Explosive Weight (HIGH–EXPL–WT) Definition: The total weight of explosives (Hazard Division 1.1 material) in the item.	7AN	Enter six or less numerals and a floating decimal point to express the total weight in pounds as defined. The computer will right justify this field, leaving preceding, unused positions blank. Enter actual Class 1 material weight for Non-Class 1 and non-regulated items. Examples: WT — ENTRY 1/8 lb — (0.125) 145–3/4 l — (145.75) 3000 lb — (3000)
13	Net Propellant Weight (NET–PROPEL–WT) Definition: The total weight of propellant (Hazard Division 1.3 material) in the item.	7AN	Enter six or less numerals and a floating decimal point to express the weight in pounds as defined. The computer will right justify this field. Refer to examples above. Enter actual Class 1 material weight for Non-Class 1 and non-regulated items.
14	Net Explosive Weight (NET–EXPL–WT) Definition: The total weight of all Class 1 material in an item. It has to equal the sum of the High Explosive Weight and the Net Propellant Weight.	7AN	The computer will do summation. Non-Class 1 items will use the sum of the High Explosive Weight and the Net Propellant Weight. Non-regulated items will use 0.0.
15	Net Explosive Weight for Q–D (NET–EXPLO–WGT–QD) Definition: The net explosive weight, the net propellant weight, or a combination of the two, for a single item according to paragraph 4–9d of the publication.	7AN	Enter six or less numerals and floating decimal point to express the weight (in pounds), that will be used for quantity distance computation. *Note.* The Net Explosive Weight will be used for transportation purposes; this value is for storage. Non-Class 1 and non-regulated items will use 0.0.
16	Part Number or Drawing Number (PART–OR–DWG–1)	16AN	Enter the manufacturer's part number or the drawing number of the main assembly for the item. Left justify this field leaving left unused positions blank and include pertinent dash or dashes. Example: (HC–01A90081–005) (7400592) (75–1–71&) (812503–133)
17	Part Number or Drawing Number (PART–OR–DWG–2)	16AN	Use this field only if field position 19 has been used. Enter the manufacturer's part number or the drawing number of the main packaging drawing for the item. Left justify this field leaving left unused positions blank and include pertinent dash or dashes. See examples in position #16. If not needed, leave blank.

Table 8–2
JHCS control record data elements—Continued

FIELD POS	DATA ITEM IDENTIFICATION	SIZE/CLASS	EXPLANATION
18	Part Number or Drawing Number (PART–OR–DWG–3)	16AN	Use if needed. Instructions same as for field positions 16 and 17.
19	Proper Shipping Name (PSN) Definition: A description specified by DOT in 49 CFR 172.101 to identify hazardous material.	150AN	Enter Proper Shipping Name from 49 CFR 172.101 up to 150 characters long. Leave unused, trailing positions blank. Example: CARTRIDGES FOR WEAPONS.
20	Technical Name (TECH–NAME) Definition: Recognized chemical name required by 49 CFR 172 for "N.O.S."	50AN	Enter technical name(s) up to 50 characters long. Leave unused, trailing positions blank.
Note: Obsolete entries (below denoted by asterisks (*)) will be available in the JHCS for those items entered prior to April 1991. Those items entered in the JHC after April 1991 will not have this information filled in. See paragraph 8–4 for further information.			
I*	Department of Transportation Label (DOT–LABEL–1) Definition: The coded definition of the label that must be applied to the shipping container(s) for a hazardous material.	1AN	Data elements I, II and III are obsolete and no longer required for changes made after April 1991. See paragraph 8–4 for these items. For those items entered into the JHCS prior to April 1991, the following would apply. Enter one number or letter to identify the first label to be affixed to the container(s) for the item. (See Table 8–3 for DOT label codes.) Example: I (for DOT label of Explosive A item).
II*	Department of Transportation Label (DOT–LABEL–2) Definition: The coded identification of the second label that must be applied to the shipping container(s) for a hazardous material.	1AN	Enter one number or letter to identify the second label to be affixed to the container(s). If not needed then leave blank. See Table 8–3 for DOT label codes. (See para 8–4 for additional DOT information.)
III*	Department of Transportation Label Code (DOT–LABEL–3) Definition: The coded identification of the third label that must be applied to the shipping container(s) for a hazardous material.	1A	If an entry has been made in field position II above, enter herein the third label to be affixed to container(s).If not needed then leave blank. See Table 8–3 for DOT label codes. (See para 8–4 for additional DOT information.)
IV*	Department of Transportation Class Code (DOT–CLASS) Definition: A code that identifies the class of hazardous materials assigned to the item for transportation purposes.	1AN	Enter number or letter. See Table 8–5 for DOT class code. This data element is also obsolete. After April 1991, for Class 1 items, the DOT class is the HD (field position 7) and CG (field position 8). For Class 2–9 items, the DOT class is the HD in field position 7. See para 8–4 for additional DOT information. The entries made before April 1991 will have DOT class code data elements.
V*	Department of Transportation Exemption (DOT–EXEMPT) Definition: The identification of the part of the 49 CFR under which the item is exempt from DOT regulations. Definition: The numeric identification of a combination of classes of explosives.	1N	Enter one of the following numerals to express the exemption: 1—Exempt under part 173.55 (pre-1991 49 CFR) 2—Exempt under part 173.260 (pre-1991 49 CFR) Enter the numeral 3, as required to identify the combination of classes of explosives portrayed in Table 8–6. This data element is also obsolete, but will be available for entries made prior to April 1991.
VI*	Department of Transportation Marking (DOT–MK) Definition: Required marking that must be used on the outside of shipping containers in accordance with 49 CFR 173.	2A	Enter two letters to designate the proper DOT marking to be placed on the shipping container(s) for the item. See Table 8–6 for DOT marking. (This data element is also obsolete. After April 1991, the container marking will consist of the proper shipping name, UN serial number, and NSN. The proper shipping name is defined by the UN serial number assigned in position 10, above. (See para 8–4 for more DOT information.)
VII*	Department of Transportation Marking Expansion (DOT–MK–EX) Definition: Additional information required to be placed on the outside of shipping containers to further identify items for transportation purposes.	2N	Relative to the marking entry infield position VI above, enter the following additional coding: 01—(Proof) 02—(White Phosphorous) 03—(Black Powder) 04—(W/Ethylene Oxide) 05—(W/Titanium Tetrachloride) 06—(GB) 07—(VX) 08—(Sodium Chlorate w/Percussion Caps) 09—(Dibenz (1, 4) Oxazepine) (CR) 10—(W/explosive cartridge)

Table 8–3
Department of Transportation (DOT) label codes

CODE	DOT LABEL
I	Explosive A
J	Explosive B
F	Explosive C
W	Corrosive
R	Flammable Liquid
X	Flammable Solid
T	Irritant
G	Non-flammable Gas
M	Magnetized Material
Y	Oxidizer
1	Poison Gas
2	Poison
3	No label required
4	Flammable liquid, Non-flammable Gas, and Poison Gas
5	Explosive and Poison Gas
6	Flammable Solid and Poison
7	Flammable Liquid and Poison
8	Oxidizer and Poison
9	Explosive A or Explosive C

Table 8–4
Hazard symbol codes

CODE	HAZARD SYMBOL	MEANING
F	G (Army only)	G-type Nerve Agent
G	VX (Army only)	VX Nerve Agent
H	H (Army only)	Mustard Agent
I	L (Army only)	Lewisite
J	BZ (Army only)	Agent BZ
A	Full protective clothing	(Red) Set 1
B	Full protective clothing	(Yellow) Set 2
C	Full protective clothing	(White) Set 3
D	Wear breathing apparatus	
E	Apply no water	

Notes:

For Air Force Users: Items coded with an "E" show that the "Apply no Water" symbol may or may not require posting of the symbol depending on quantity being stored and/or amount of water available in event of a fire. Air Force personnel refer to Air Force Regulation 92–1 and consult with local fire chief to determine the applicability of using the symbol for each location.

Table 8–5
Department of Transportation (DOT) class codes

CODE	DOT LABEL
I	Class A Explosive
J	Class B Explosive
F	Class C Explosive
W	Corrosive Material
R	Flammable Liquid
X	Flammable Solid
T	Irritating Solid
G	Non-flammable Gas
Y	Oxidizer
S	Poison A
P	Poison B
3	Class A Explosive or C Explosive

Table 8–6
Department of Transportation (DOT) shipping description codes

CODE	DOT MARKING	DOT PROPER SHIPPING NAME
AB	AMMUNITION FOR CANNON W/EXPLOSIVE PROJECTILES	Ammunition for cannon with explosive projectile
AC	AMMUNITION FOR CANNON W/ GAS PROJECTILES	Ammunition for cannon with gas projectile
AD	AMMUNITION FOR CANNON W/ILLUMINATING PROJECTILES	Ammunition for cannon with illuminating projectile
AF	AMMUNITION FOR CANNON W/INERT LOADED PROJECTILES	Ammunition for cannon with inert projectile
AG	AMMUNITION FOR CANNON W/SMOKE PROJECTILES, CLASS A EXPLOSIVES	Ammunition for cannon with smoke projectile
AH	AMMUNITION FOR CANNON W/SOLID PROJECTILES	Ammunition for cannon with solid projectile
AI	AMMUNITION FOR CANNON W/O PROJECTILES	Ammunition for cannon without projectile
AK	AMMUNITION FOR SMALL ARMS W/EXPLOSIVE PROJECTILES	Ammunition for small arms with explosive projectile
AL	BLACK POWDER	Black Powder
AN	(QTY) BLASTING CAPS—HANDLE CAREFULLY	Blasting caps (show actual number)
AP	BOOSTERS (EXPLOSIVE)—HANDLE CAREFULLY	Booster, explosive
AQ	BURSTERS (EXPLOSIVE)—HANDLE CAREFULLY	Burster, explosive
AR	CANNON PRIMERS—HANDLE CAREFULLY	Cannon primers
AU	COMBINATION FUZES—HANDLE CAREFULLY	Combination fuze
AV	COMBINATION PRIMERS—HANDLE CAREFULLY	Combination primers
AZ	DETONATING FUZES, CLASS A EXPLOSIVES—HANDLE CAREFULLY—DO NOT STORE OR LOAD WITH ANY HIGH EXPLOSIVES	Detonating fuze, Class A explosive
BB	DETONATING FUZES, CLASS C EXPLOSIVE—HANDLE CAREFULLY	Detonating fuze, Class C Explosive
BE	ELECTRIC SQUIBS	Electric squib
BF	EXPLOSIVE BOMBS	Explosive bomb
BG	EXPLOSIVE CABLE CUTTERS—HANDLE CAREFULLY—KEEP FIRE AWAY	Explosive cable cutter
BH	EXPLOSIVE MINES	Explosive mine
BI	EXPLOSIVE PROJECTILES	Explosive projectile
BJ	EXPLOSIVE RELEASE DEVICES—HANDLE CAREFULLY— KEEP FIRE AWAY	Explosive release device
BN	FLAMMABLE LIQUID, N.O.S.	Flammable liquid, n.o.s.
BO	FLAMMABLE SOLID, N.O.S.	Flammable solid, n.o.s.
BQ	FUSE LIGHTERS	Fuse lighter
BS	HAND GRENADES	Grenade, hand, explosive
BT	HIGH EXPLOSIVES—DANGEROUS	High explosive
BW	IGNITERS	Igniters
BX	IGNITERS, JET THRUST, CLASS A EXPLOSIVES	Igniter, jet-thrust (jato)
BY	IGNITERS, JET THRUST, CLASS B EXPLOSIVES	Igniter, jet-thrust (jato)
CB	JET THRUST UNIT, CLASS A EXPLOSIVES	Jet thrust unit (jato)
CE	PERCUSSION CAPS —HANDLE CAREFULLY	Percussion cap
CF	PERCUSSION FUZES—HANDLE CAREFULLY	Percussion fuze

Table 8–6
Department of Transportation (DOT) shipping description codes—Continued

CODE	DOT MARKING	DOT PROPER SHIPPING NAME
CJ	PROPELLANT EXPLOSIVES, CLASS A	Propellant explosive
CK	PROPELLANT EXPLOSIVES (SOLID) CLASS B	Propellant explosive, solid
CN	FUSEES—HANDLE CAREFULLY—KEEP FIRE AWAY	Fusees
CP	RIFLE GRENADES	Grenade, rifle explosive
CQ	ROCKET AMMUNITION W/EMPTY PROJECTILES	Rocket ammunition with empty projectile
CR	ROCKET AMMUNITION W/EXPLOSIVE PROJECTILES	Rocket ammunition with explosive projectile
CS	ROCKET AMMUNITION W/ILLUMINATING PROJECTILES	Rocket ammunition with illuminating projectile
CT	ROCKET AMMUNITION W/GAS PROJECTILES	Rocket ammunition with gas projectile
CU	ROCKET AMMUNITION W/INCENDIARY PROJECTILES	Rocket ammunition with incendiary projectile
CV	ROCKET AMMUNITION W/INERT LOADED PROJECTILES	Rocket ammunition with inert loaded projectile
CW	ROCKET AMMUNITION W/SMOKE PROJECTILES	Rocket ammunition with smoke projectile
CX	ROCKET AMMUNITION WITH SOLID PROJECTILE	Rocket ammunition with solid projectile
CZ	SAFETY FUSE	Safety fuse or fuse, safety
DA	SAFETY SQUIBS	Safety squib
DB	SIGNAL FLARES—HANDLE CAREFULLY—KEEP FIRE AWAY	Signal flare
DC	SMALL ARMS AMMUNITION	Small arms ammunition
DD	SMALL ARMS AMMUNITION IRRITATING (TEAR GAS) CARTRIDGES	Small arms ammunition, irritating cartridge
DE	SMALL ARMS PRIMERS—HANDLE CAREFULLY	Small arms primer
DF	SMOKE POTS—HANDLE CAREFULLY—KEEP FIRE AWAY	Smoke pot
DG	SMOKE SIGNALS—HANDLE CAREFULLY—KEEP FIRE AWAY	Smoke signal
DH	SPECIAL FIREWORKS—HANDLECAREFULLY—KEEP FIRE AWAY	Fireworks, special
DK	TIME FUSES—HANDLE CAREFULLY	Fuse, time
DR	COMMON FIREWORKS—HANDLECAREFULLY—KEEP FIRE AWAY	Fireworks, common
DS	CHLOROACETOPHENONE, SOLID (CN)	Chloroacetophenone, solid (CN)
DU	CHLOROACETOPHENONE, LIQUID (CN)	Chloroacetophenone, liquid
DX	GRENADE, TEAR GAS	Grenade, tear gas
DZ	PHOSPHORUS, WHITE, DRY	Phosphorus, white, dry
EA	EXPLOSIVE POWER DEVICES, CLASS C—HANDLE CAREFULLY—KEEP FIRE AWAY	Explosive power device, Class C
ED	STARTER CARTRIDGES, JET ENGINE, CLASS C EXPLOSIVES—HANDLE CAREFULLY—KEEP FIRE AWAY	Starter cartridge
EK	ROCKET MOTORS, CLASS A EXPLOSIVES	Rocket motor
EM	ROCKET MOTORS, CLASS B EXPLOSIVES	Rocket motor
EN	AMMUNITION FOR SMALL ARMS W/INCENDIARY PROJECTILES	Ammunition for small arms with incendiary projectile
EQ	HAND SIGNAL DEVICES—HANDLE CAREFULLY—KEEP FIRE AWAY	Hand signal device
ET	EXPLOSIVE TORPEDO	Explosive torpedo

Table 8–6
Department of Transportation (DOT) shipping description codes—Continued

CODE	DOT MARKING	DOT PROPER SHIPPING NAME
EW	CARTRIDGES, PRACTICE AMMUNITION	Cartridge, practice ammunition
EX	TRACERS—HANDLE CAREFULLY	Tracer
FA	DETONATORS—HANDLE CAREFULLY	Detonators, Class A Explosives
FB	DETONATORS—HANDLE CAREFULLY	Detonators, Class C Explosives
FC	FLEXIBLE LINEAR SHAPED CHARGE, METAL CLAD—HANDLE CAREFULLY	Flexible linear shaped charge, metal clad
FD	ELECTROLYTE (ACID) BATTERY FLUID	Electrolyte battery fluid
FE	SMOKE CANDLES—HANDLE CAREFULLY—KEEP FIRE AWAY	Smoke candles
FF	SUPPLEMENTARY CHARGE (EXPLOSIVE)—HANDLE CAREFULLY	Supplementary charge (explosive)
XA	OXIDIZING MATERIAL, N.O.S.	Oxidizing material, n.o.s.
XB	NITROGEN	Nitrogen
XC	HELIUM	Helium
XD	ACCUMULATOR, HYDRAULIC	Hydraulic accumulator or Accumulator, hydraulic
XE	ARGON	Argon
XF	ROCKET ENGINES (LIQUID), CLASS B EXPLOSIVES	Rocket engine, liquid
XG	ACTUATING CARTRIDGES, EXPLOSIVE,VALVE—HANDLE CAREFULLY	Actuating cartridge, explosive
XH	DETONATING PRIMERS—HANDLE CAREFULLY	Detonating primer
XJ	EMPTY CARTRIDGE CASES, PRIMED—HANDLE CAREFULLY	Empty cartridge case, primed
XL	JET THRUST UNITS, CLASS B EXPLOSIVES	Jet thrust unit
XM	IGNITERS, ROCKET MOTORS, CLASS B EXPLOSIVES	Igniter, rocket motor
XN	SMOKE GRENADES—HANDLE CAREFULLY—KEEP FIRE AWAY	Smoke grenade
XS	POISONOUS GAS, N.O.S.	Poisonous gas, n.o.s.
XT	IGNITER FUSE—METAL CLAD	Igniter fuse, metal clad
XU	EXPLSOIVE POWER DEVICES, CLASS B—HANDLE CAREFULLY—KEEP FIRE AWAY	Explosive power device, Class B
XV	ACTUATING CARTRIDGES, EXPLOSIVE, FIRE EXTINGUISHER—HANDLE CAREFULLY	Actuating cartridge, explosive
XW	AMMUNITION FOR CANNON WITH EMPTY PROJECTILES	Ammunition for cannon with empty projectiles
XX	AMMUNITION, NON-EXPLOSIVE	Ammunition, non-explosive *Note*. "Ammunition, non-explosive" is technically not a DOT marking and containers need not be marked as such for transportation purposes. If containers are presently marked "Ammunition, non-explosive," they need not be remarked.
XY	CHEMICAL AMMUNITION, NON-EXPLOSIVE, CONTAINING A POISON MATERIAL	Chemical ammunition, non-explosive
XZ	MILD DETONATING FUSE, METAL CLAD—HANDLE CAREFULLY	Fuse, mild detonating, metal
YA	METHYLHYDRAZINE	Methlhydrazine
YB	NITROGEN TETROXIDE LIQUID	Nitrogen tetroxide, liquid
YD	ETHYLENE OXIDE	Ethylene oxide

Table 8–6
Department of Transportation (DOT) shipping description codes—Continued

CODE	DOT MARKING	DOT PROPER SHIPPING NAME
YE	EXPLOSIVE RIVETS	Explosive rivets
YF	ELECTROLYTE (ACID), BATTERY FLUID (NOT OVER 47% ACID)	Electrolyte, battery fluid
YG	IGNITERS, ROCKET MOTOR, CLASS A EXPLOSIVES	Igniter, rocket motor
YN	IRRITATING AGENT, N.O.S.	Irritating agent, n.o.s.
YI	CHEMICAL AMMUNITION, NON-EXPLOSIVE (CONTAINING ANIRRITATING MATERIAL)	Chemical ammunition, non-explosive (containing an irritating material)
YJ	BATTERY, ELECTRIC STORAGE, WET, FILLED WITH ALKALI	Battery, electric storage, wet, filled with alkali
YK	BATTERY, ELECTRIC STORAGE, WET, FILLED WITH ACID	Battery, electric storage, wet, filled with acid
YN	OXYGEN (WITH ELECTRIC SQUIB)	Oxygen
YP	TEAR GAS DEVICE	Tear gas device
YQ	DETONATING CORD—HANDLE CAREFULLY	Cord, detonating flexible
		Note. For Class A
YR	CORD, DETONATING FLEXIBLE—HANDLE CAREFULLY	Cord, detonating flexible
		Note. For Class C

APPENDIX A
REFERENCES related publications

1. Department of Defense Ammunition and Explosives Safety Standards, DoD 6055.9-STD, (latest revision). Defense Printing Service Detachment Office, 700 Robbins Avenue, Philadelphia, PA 19111. Phone: 215-697-2667; FAX 215-697-1462.

2. NATO Standardization Agreement (STANAG) 4123, Methods to Determine and Classify the Hazards of Military Ammunition and Explosives, (latest revision). Defense Printing Service Detachment Office, 700 Robbins Avenue, Philadelphia, PA 19111. Phone: 215-697-2667; FAX: 215-697-1462.

3. Code of Federal Regulations, Transportation, Title 49, Parts 100 to 177, (latest revision. Superintendent of Documents, Government Printing Office, Washington, DC 20402; Phone: 202-512-1800.

4. Recommendations on the Transport of Dangerous Goods, ST/SG/AC.10/1/latest revision. United Nations Publication, New York, New York 10017; Phone: (212) 963-8302.

5. Code of Federal Regulations, Protection of Environment, Title 40, Parts 260 to 299 (latest revision). Superintendent of Documents, Government Printing Office, Washington, DC 20402; Phone: 202-512-1800.

6. Recommendations on the Transport of Dangerous Goods, Tests and Criteria, ST/SG/AC.10/11/ latest revision. United Nations Publication, New York, New York 10017; Phone: 212-963-8302.

7. Ribovich, J., Watson, R. W. and Gibson, F. C., Instrumented Card Gap Test, AIAA Journal, Vol 6, No. 7, pp. 1260-1263, 1968. Linda Hall Library, 5109 Cherry Street, Kansas City, MO 64110-2498; Phone: 800-662-1545; FAX 816-926-8785.

8. ASME B16.11-1991, "Forged Fittings, Socket-Welding and Threaded," American Society of Mechanical Engineers, New York, NY (latest revision); Phone: 212-705-7800.

9. ASTM D56-87, "Standard Test Method for Flash Point by Tag Closed Tester," American Society for Testing and Materials, Philadelphia, PA (latest revision) Phone: 215-299-5400.

10. Giglio-Tos, L. and Linnebrink, T., "Air Blast Pressure Measurement Systems and Techniques," Minutes, 15th DDESB Seminar, pgs 1359-1402, September 1973 (AD 755-660). Defense Technical Information Center, Fort Belvoir, VA; Phone: 800-225-3842.

11. Kingery, C. N. and Bulmash, G., "Airblast Parameters from TNT Spherical Air Burst and Hemispherical Surface Burst," ARBRL-TR-02555, April 1984 (AD B082713). Defense Technical Information Center, Fort Belvoir, VA; Phone: 800-225-3842.

12. McCleskey, F., "Quantity-Distance Fragment Hazard Computer Program (FRAGHAZ)," NSWC

TR 87-59, February 1988. Naval Surface Warfare Center, Dahlgren Division, 17320 Dahlgren Road, Technical Library, Dahlgren, VA 22448-5000; Phone: 540-653-8351; FAX 540-653-7165.

13. Hay, J. C. and Watson, R. W., "Scaling Studies of Thermal Radiation Flux from Burning Propellants," Minutes, 25th DDESB Seminar, Volume IV, pp. 233-268, August 1992. (AD A26116) Defense Technical Information Center, Fort Belvoir, VA; Phone: 800-225-3842.

14. MIL-STD-1751, Military Standard, Safety and Performance Tests for the Qualification of Explosives (High Explosives, Propellants, and Pyrotechnics) (latest revision). Defense Printing Service Detachment Office, 700 Robbins Avenue, Philadelphia, PA 19111; Phone: 215-697-2667.

15. MIL-STD-2105, Military Standard, Hazard Assessment Tests for Non-Nuclear Munitions (latest revision). Defense Printing Service Detachment Office, 700 Robbins Avenue, Philadelphia, PA 19111; Phone: 215-697-2667.

16. Lu, Pai, AARDEC Solid Gun Propellant Shock Initiation Sensitivity Test," Minutes 26th DDESB Seminar, August 1994. CD-ROM, Defense Technical Information Center, Fort Belvoir, VA; Phone: 800-225-3842.